ICC-ES Evaluation Report

ESR-3444

Reissued October 2024

Revised July 2026

This report remains under an active continuous compliance program through the end of October 2026.

This report also contains:

- **City of LA Supplement**
- **CA Supplement**
- **FL Supplement w/ HVHZ**

ICC-ES Evaluation Reports are not to be construed as representing aesthetics or any other attributes not specifically addressed, nor are they to be construed as an endorsement of the subject of the report or a recommendation for its use. There is no warranty by ICC Evaluation Service, LLC, express or implied, as to any finding or other matter in this report, or as to any product covered by the report.

Copyright © 2026 ICC Evaluation Service, LLC. All rights reserved.

DIVISION: 06 00 00—WOOD, PLASTICS AND COMPOSITES Section: 06 05 23—Wood, Plastic, and Composite Fastenings	REPORT HOLDER: MITEK® INC.	EVALUATION SUBJECT: MITEK® TOP MOUNT HANGERS FOR WOOD FRAMED CONSTRUCTION	

1.0 EVALUATION SCOPE

Compliance with the following codes:

- 2024, 2021, 2018, 2015, and 2012 *International Building Code®* (IBC)
- 2024, 2021, 2018, 2015, and 2012 *International Residential Code* (IRC)

Property evaluated:

- Structural

2.0 USES

The MiTek Top Mount Hangers for Wood Framed Construction described in this report (see Table 25 for a complete listing) are structural connectors used for connecting wood framing members in accordance with Section 2304.10.4 of the 2024 and 2021 IBC, Section 2304.10.3 of the 2018 and 2015 IBC, and Section 2304.9.3 of the 2012 IBC. The connectors may also be used in structures regulated under the IRC when an engineered design is submitted to, and approved by, the code official, in accordance with Section R301.1.3 of the IRC.

3.0 DESCRIPTION

3.1 BPH Beam and Purlin Hanger:

The BPH beam and purlin hanger is designed to support beams and purlins consisting of structural composite lumber (SCL), such as laminated veneer lumber (LVL), laminated strand lumber (LSL), and parallel strand lumber (PSL). The BPH beam and purlin hanger is cold-formed from No. 12 gage steel and is prepunched for 16d common nails into the header, and either 10d common or 10d-by-$1^1/_2$-inch-long nails into the joist. See Table 1 and Figure 1 for product dimensions, fastener schedules, allowable loads, and a typical installation detail.

3.2 BPHA Beam and Purlin Hanger:

The BPHA beam and purlin hanger is a top mount hanger designed to support beams and purlins consisting of solid sawn lumber or structural composite lumber (SCL). The BPHA hanger is cold-formed from No. 12 gage steel and is prepunched for either 10d common or 16d common nails into header, and 10d-by-$1^1/_2$-inch long nails into the joist. See Tables 2A and 2B and Figure 2 for product dimensions, fastener schedule, allowable loads, and typical installation details.

3.3 HBPH Beam and Purlin Hanger:

The HBPH beam and purlin hanger is designed to support SCL beams and purlins. The HBPH beam and purlin hanger is cold-formed from No. 10 gage steel and is prepunched for 16d common nails into the header, and 16d common nails into the joist. See Table 3 and Figure 3 for product dimensions, fastener schedules, allowable loads, and a typical installation detail.

3.4 HDO Top Mount Hanger:

The HDO Top Mount Hanger is designed to support dimension sawn lumber headers over door or window openings. The HDO Top Mount Hanger is cold-formed from No. 12 gage steel; and is prepunched for either 16d common, 10d common, or 10d-by-$1^1/_2$-inch-long nails. See Table 4 and Figure 4 for product dimensions, fastener schedule, allowable loads, and typical installation details.

3.5 HL Light Gage Purlin Hanger:

The HL Light Gage Purlin Hanger is designed as a top-mount-type hanger, flanged at right angles to permit direct face nailing to the joist and header. The HL Light Gage Purlin Hanger is cold-formed from No. 18 gage steel and is prepunched for 16d common nails into the header, and in the case of model HL214, 10d-by-$1^1/_2$-inch-long nails into the joist. See Table 5 and Figure 5 for product dimensions, fastener schedule, allowable loads, and a typical installation detail.

3.6 HLBH Beam Hanger:

The HLBH beam hangers are designed as top mount hangers for applications supporting SCL beams. The HLBH is fabricated from No. 7 gage hot-rolled steel plate. The U-shaped portion of the HLBH hanger is factory-welded to the angle-shaped supporting flange. The HLBH beam hangers are prepunched for 0.148-inch-diameter (3.76 mm), $3^1/_2$-inch-long (89 mm), hardened post-frame ring shank nails into the header, and either 16d common or 10d-by-$1^1/_2$-inch-long nails into the joist. See Table 6 and Figure 6 for product dimensions, fastener schedules, allowable loads, and a typical installation detail.

3.7 JDS Purlin Hangers:

The JDS Purlin Hanger is designed for purlin applications to provide double shear nailing. The JDS Purlin Hanger is cold-formed from No. 18 gage steel; and is pre-punched for 10d-by-$1^1/_2$-inch nails into header and 10d common nails into the joist. It can be installed in either a single- or double-sided configuration. See Table 7 and Figure 7 for product dimensions, fastener schedules, allowable loads, and a typical installation detail.

3.8 JH Joist Hanger:

The JH joist hanger is used to connect joists to the face of header members. The hanger is manufactured from No. 18 gage steel, and is prepunched for 10d common nails. See Table 8 and Figure 8 for product dimensions, header sizes, fastener schedule, allowable loads, and typical installation details.

3.9 JPF Purlin Hanger:

The JPF Purlin Hanger is designed to support nominally 2-by lumber. The connector is provided with constant width and different heights and consists of “U” shaped straps with bent top flanges. The purlin hanger is cold-formed from No. 20 gage steel and is prepunched for 10d common nails. The joist nails must be driven at an angle from 30 to 45 degrees horizontally through the joist into the header such that the joist is toe-nailed to the header. See Table 9 and Figure 9 for product dimensions, fastener schedule, allowable loads, and typical installation details.

3.10 KEG, KMEG and KLEG Glulam Beam Hangers:

The KEG, KMEG and KLEG hangers are designed to connect glued-laminated beams together, using $^3/_4$- or 1-inch-diameter (19 or 25.4 mm) through bolts. The U-straps and the KLEG and KMEG top flanges are manufactured from minimum No. 7 gage hot-rolled steel plate. The KEG top flanges are manufactured from No. 3 gage hot-rolled steel plate. All U-straps are welded to the flange component utilizing factory welds. See Table 10 and Figure 10 for product dimensions, fastener schedule, allowable loads, and a typical installation detail.

3.11 KEGQ Glulam Girder Hanger:

The KEGQ hangers are designed to connect glued-laminated beams together using WS screws. The U-straps of the hangers are manufactured from No. 7 gage hot-rolled steel plate. The top flanges of the hangers are manufactured from No. 3 gage hot-rolled steel plate. The U-strap is welded to the top flange component utilizing factory welds. See Table 11 and Figure 11 for product dimensions, fastener schedule, allowable loads, and a typical installation detail.

3.12 KF Panel Hanger:

The KF Panel Hanger is designed to fasten joist ends to the supporting construction. The KF Panel Hanger is cold-formed from No. 18 gage steel and is prepunched for 10d common nails into the header and

10d-by-1$^1/_2$-inch-long nails into the joist. See Table 12 and Figure 12 for product dimensions, fastener schedule, allowable loads, and a typical installation detail.

3.13 KGLS, KGLST, KHGLS and KHGLST Glulam Saddle Hangers:

The KGLS and KHGLS Glulam Saddle Hangers are designed to connect glued-laminated or sawn lumber beams to a supporting member. The KGLST and KHGLST Glulam Saddle Hangers are designed to connect glued-laminated beams to a girder, and to transfer wind and seismic forces in drag strut applications. The U-shaped saddles are fabricated from minimum No. 7 gage hot-rolled steel plate, and the top flanges are fabricated from No. 3 gage hot-rolled steel plate. The saddles are connected to the top flange component and the side straps are factory-welded to each of the saddles of the KGLST and KHGLST hangers. The KGLS, KGLST, KHGLS and KHGLST Glulam Saddle Hangers are prepunched for WS screws. Additionally, the side straps and top flange on the KGLST and KHGLST have holes for installing $^3/_4$-inch-diameter (19 mm) bolts. See Table 13 and Figure 13 for product dimensions, fastener schedule, allowable loads, and a typical installation detail.

3.14 KGLT and KHGLT Glulam Beam Hangers:

The KGLT and KHGLT Glulam Beam Hangers are designed to connect glued-laminated or sawn lumber beams to a supporting member. The U-shaped saddle is fabricated from minimum No. 7 gage hot-rolled steel plate and the top flange is fabricated from No. 3 gage hot-rolled steel plate. The saddle is factory-welded to the top flange component. The KGLT and KHGLT Glulam Beam Hangers are prepunched for WS screws. See Table 14 and Figure 14 for product dimensions, fastener schedule, allowable loads, and a typical installation detail.

3.15 KHC Hinge Connector and KHCST / KHCSTR Seismic Straps:

The KHC Hinge Connector is designed to support end-to-end connected glued-laminated beams having the same width and top elevation. The connectors consist of steel top and bottom plates factory-welded to steel side plates forming a rectangular assembly. The side plates of the connector have holes for installing the required bolts. The KHCST and KHCSTR Seismic Strap is used as an independent part to transfer axial tension induced by wind or seismic loading from one beam to the other, and is used in conjunction with the KHC to provide additional resistance to horizontal loads when installed in pairs. The KHC Hinge Connector side plates and KHCST / KHCSTR Seismic Strap are fabricated from minimum No. 7 or No. 3 gage hot-rolled steel plate. The KHC Hinge Connector top and bottom plates are manufactured from $^3/_4$-inch-(19 mm), 1-inch-(25 mm), 1$^1/_4$-inch- (32 mm) or 1$^1/_2$-inch-thick (38 mm) hot-rolled steel plate. The KHC Hinge Connector and KHCST / KHCSTR Seismic Strap are installed with $^3/_4$-inch-diameter (19 mm) bolts. See Table 15 and Figure 15 for product dimensions, fastener schedule, allowable loads, and a typical installation detail.

3.16 KLB, KB, KHHB, KGB, KHGB Top Mount Hangers:

The KLB, KB, KHHB, KGB, and KHGB hangers are top-mount hangers designed to connect glued-laminated beams together. The KLB hangers are formed from No. 14 gage steel and are prepunched for 10d-by-1$^1/_2$ inch long and 16d common nails. The KB hangers are formed from No. 12 gage steel and are prepunched for 10d-by-1$^1/_2$-inch-long and NA20D nails. The KHHB, KGB, and KHGB hangers are formed from No. 7 gage steel and are prepunched for WS screws. See Table 16 and Figure 16 for product dimensions, fastener schedule, allowable loads, and a typical installation detail.

3.17 MSH Strap Hanger:

The MSH strap hanger is designed to allow a field-adjustable top flange, face mount, or combination for supporting dimension sawn lumber joists or open web wood trusses. The MSH strap hanger is cold-formed from either No. 14 gage, No. 16 gage or No. 18 gage steel. The MSH strap hanger is prepunched for either 16d common or 10d common nails into the header, and either 16d common, 10d common or 10d-by-1$^1/_2$-inch-long nails into the joist. See Table 17 and Figure 17 for product dimensions, fastener schedules, allowable loads, and typical installation details.

3.18 PHG Panel Hanger:

The PHG Panel Hanger is designed to fasten joist ends to the supporting wood member. The side flanges of the hanger are turned inward toward the joist to embed into the joist during installation. The PHG Panel Hanger is cold-formed from No. 18 gage steel and is prepunched for 8d or 10d common nails. See Table 18 and Figure 18 for product dimensions, fastener schedule, allowable loads, and a typical installation detail.

3.19 PHM Top Flange Hanger:

The PHM top flange hangers are designed to connect structural composite lumber (SCL) beams to dimension sawn lumber or SCL headers. The U-shaped portion of the PHM top flange hanger is cold-formed from No. 10 gage steel, and is factory-welded to the angle-shaped supporting flange, which is cold-formed from No. 7 gage steel. The hangers are prepunched for 16d common nails into the header, and either 10d common or

10d-by-1$^1/_2$-inch-long nails into the joist. See Table 19 and Figure 19 for product dimensions, fastener schedules, allowable loads, and typical installation details.

3.20 PHXU Beam and Purlin Hangers:

PHXU beam and purlin hangers are used for connecting sawn lumber or SCL joists, beams and purlins to sawn lumber or SCL headers. The hangers are manufactured from No. 7 gage steel. The hangers are prepunched for 16d common nails into the header, and either 10d common or 10d-by-1$^1/_2$-inch-long nails into the joist. See Table 20 and Figure 20 for nailing schedules, dimensions and allowable loads.

3.21 SW, SWH and KHW Top Mount Hangers:

The SW, SWH and KHW top mount hangers consist of "U" shaped straps welded to bent top flanges in a variety of widths and heights, and are used to connect joists to header members. The hangers are manufactured from Nos. 12, 10, 7 and 3 gage steel. The hangers are prepunched for either 10d, 16d or 20d-by-2$^1/_2$-inch-long nails into the header, and either 10d common or 10d-by-1$^1/_2$-inch-long nails into the joist. See Table 21 and Figure 21 for nailing schedules, dimensions and allowable loads.

3.22 TFI Top Mount Hanger:

The TFI Top Mount Hanger is designed as a top-flange-mounted hanger to support solid sawn lumber joists. The TFI Top Mount Hanger is cold-formed from No.16 gage steel and is prepunched for 16d common nails into the header and 10d-by-1$^1/_2$-inch-long nails into the solid sawn lumber joists. See Table 22 and Figure 22 for product dimensions, fastener schedule, allowable loads, and a typical installation detail.

3.23 TFL Wood I-Joist Hanger:

The TFL Wood I-Joist Hanger is designed to support prefabricated wood I-joists, and is cold-formed from No. 18 gage steel. The TFL Wood I-Joist Hanger is prepunched for either 10d or 16d common nails into the header, and 10d-by-1$^1/_2$-inch-long nails into the supported I-joist. See Table 23 and Figure 23 for product dimensions, fastener schedule and allowable loads.

3.24 THO Top Mount Hanger:

The THO Top Mount Hanger is designed to provide lateral top chord support of an I-joist header in I-joist-to-header applications. The THO Top Mount Hanger is cold-formed from either No. 18 gage, No. 16 gage, or No. 12 gage steel; and is prepunched for either 16d common or 10d common nails into the header, and either 10d common or 10d-by-1$^1/_2$-inch-long nails into the joist. See Table 24 and Figure 24 for product dimensions, fastener schedule, allowable loads, and a typical installation detail.

3.25 Materials:

3.25.1 Steel: The specific types of steel and corrosion protection for each product described in this report are shown in Table 25. Minimum steel base-steel thicknesses for the different gages are shown in the following table:

GAGE NO.	MINIMUM BASE-STEEL THICKNESS (inch)
20	0.033
18	0.044
16	0.055
14	0.070
12	0.099
10	0.129
7	0.171
3	0.240

3.25.2 Wood: Wood members with which the connectors are used must be dimension sawn lumber or structural glued laminated timber with a minimum specific gravity of 0.50, or approved structural engineered wood products (structural composite lumber or prefabricated wood I-joists) with a minimum equivalent specific gravity of 0.50, unless otherwise noted in the applicable table within this report. Wood members must have a moisture content not exceeding 19 percent in sawn lumber (16 percent in structural composite lumber), except as noted in Section 4.1. For connectors installed with nails or screws, the thickness of each wood member must be sufficient such that the specified fasteners do not protrude through the opposite side of the member, unless otherwise permitted in the applicable table within this report. For installations in structural composite lumber, minimum allowable nail or screw spacing and end distance, as specified in an applicable evaluation report for the structural composite lumber, must be met. Refer to Section 3.25.4 for issues related to treated wood.

3.25.3 Fasteners: Required fastener types and sizes for use with the connectors described in this report are specified in this section and in Tables 1 through 24.

3.25.3.1 Bolts: At a minimum, bolts must comply with ASTM A307 and must have a minimum bending yield strength of 45,000 lbf/in^2 (310 MPa). Bolt diameters must be as specified in the applicable tables of this report.

3.25.3.2 MiTek WS Wood Screws: The wood screws used for connectors described in this report are MiTek WS wood screws. The screws are heat-treated cold-formed screws with rolled threads, spaced 10 threads per inch. Refer to ESR-2761 for required MiTek WS wood screw dimensions and mechanical properties.

3.25.3.3 Nails: Nails used for connectors described in this report must be bright or hot-dipped galvanized carbon steel nails complying with material requirements, physical properties, tolerances, workmanship, protective coating and finishes, and packaging and package marking requirements specified in ASTM F1667, and must have lengths, diameters and bending yield strengths as shown in the following table:

FASTENER DESIGNATION	FASTENER LENGTH (inches)	SHANK DIAMETER (inch)	MINIMUM REQUIRED F_{yb} (psi)
8d common	2.5	0.131	100,000
10d common	3.0	0.148	90,000
10d-by-1$^1/_2$	1.5	0.148	90,000
16d common	3.5	0.162	90,000
3$^1/_2$″ P-F nail [1]	3.5	0.148	115,000
20d x 2$^1/_2$	2.5	0.192	80,000
NA20D	2.5	0.192	80,000
$^3/_4$″ dia. bolt	Varies	0.750	45,000
1″ dia. bolt	Varies	1.00	45,000

For **SI:** 1 inch = 25.4 mm, 1 psi = 6.895 kPa.

[1]The 3$^1/_2$" P-F nail is a hardened post-frame ring shank nail complying with ASTM F1667.

Alternatively, nails of other materials or finishes may be used when they are recognized in an ICC-ES evaluation report as having bending yield strength and withdrawal capacity equal to or better than those of a bright carbon steel of the same nominal diameter.

3.25.4 Use in Treated Wood: Connectors and fasteners used in contact with preservative-treated or fire-retardant-treated wood must comply with Section 2304.10.6 of the 2024 and 2021 IBC, Section 2304.10.5 of the 2018 and 2015 IBC, and Section 2304.9.5 of the 2012 IBC or Section R304.3 of the 2024 IRC or Section R317.3 of the 2021, 2018, 2015, and 2012 IRC, as applicable. The lumber treater or the holder of this report (MiTek), or both, should be contacted for recommendations on the appropriate level of corrosion resistance to specify for the connectors, as well as the connection capacities of the fasteners used with the specific proprietary preservative-treated or fire-retardant-treated lumber. Fasteners used in contact with preservative-treated or fire-retardant-treated wood must be hot-dipped galvanized carbon steel nails. Alternatively, nails of other materials and finishes may be used when they are recognized in an ICC-ES evaluation report for use in the applicable treated lumber and have equivalent or greater capacities as those required in this report.

4.0 DESIGN AND INSTALLATION

4.1 Design:

The allowable loads in Tables 1 through 24 are based on allowable stress design. The use of the allowable load values for the products listed in this report must comply with all applicable requirements and conditions specified in this report. Tabulated allowable loads are for normal load duration and short load duration, based on load duration factors, C_D, in accordance with Section 11.3.2 of the 2024, 2018 and 2015 *National Design Specification*® (NDS) *for Wood Construction* (Section 10.3.2 of the 2012 NDS for the 2012 IBC and IRC), as indicated in Tables 1 through 24 of this report. No further increases are permitted for load durations other than those specified. Tabulated allowable loads are for connections in wood seasoned to a maximum moisture content of 19 percent (16 percent for SCL) or less, used under continuously dry conditions and where sustained temperatures are limited to 100°F (37.8°C) or less. When connectors are installed in wood having a moisture content greater than 19 percent (16 percent for SCL), or where the in-service moisture content is expected to exceed this value, the applicable wet service factor, C_M, must be applied. Unless otherwise noted in the tables of this report, the applicable wet service factor, C_M, is as specified in the NDS for lateral loading of dowel-type fasteners. When connectors are installed in wood that will experience sustained exposure to temperatures exceeding 100°F (37.8°C), the allowable loads in this evaluation report must be adjusted by the temperature

factor, C_t, specified in Section 11.3.4 of the NDS (Section 10.3.4 of the 2012 NDS). Group action factor, C_g, has been accounted for, in accordance with Section 10.3.6 of the NDS, in the tabulated allowable loads, where applicable. For connectors installed with bolts, minimum edge distances and end distances within the wood members must be met, such that the geometry factor, C_Δ, is 1.0, in accordance with Section 12.5.1 of the NDS (Section 11.5.1 of the 2012 NDS). Connected wood members must be checked for load-carrying capacity at the connection in accordance with Section 11.1.2 of the NDS (Section 10.1.2 of the 2012 NDS).

4.2 Installation:

Installation of the connectors must be in accordance with this evaluation report and the manufacturer's published installation instructions. Bolts must be installed in accordance with Section 12.1 of the NDS (Section 11.1 of the 2012 NDS).

Special Inspection:

4.2.1 Main Wind-force-resisting Systems under the IBC: Periodic special inspection must be conducted for components within the main wind-force-resisting system, where required in accordance with Sections 1704.2 and 1705.12 of the 2024 and 2021 IBC, Sections 1704.2 and 1705.11 of the 2018 and 2015 IBC, and Sections 1704.2 and 1705.10 of the 2012 IBC, as applicable.

4.2.2 Seismic-force-resisting Systems under the IBC: Periodic special inspection must be conducted for components within the seismic-force-resisting system, where required in accordance with Sections 1704.2 and 1705.13 of the 2024 and 2021 IBC, Sections 1704.2 and 1705.12 of the 2018 and 2015 IBC, and Sections 1704.2 and 1705.11 of the 2012 IBC as applicable.

4.2.3 Installations under the IRC: Special inspections are normally not required for connectors used in structures regulated under the IRC. However, for components and systems requiring an engineered design in accordance with IRC Section R301, periodic special inspection requirements and exemptions must be in accordance with Sections 4.2.1 and 4.2.2 of this report.

5.0 CONDITIONS OF USE:

The MiTek Top Mount Hangers described in this report comply with, or are suitable alternatives to what is specified in, those codes listed in Section 1.0 of this report, subject to the following conditions:

5.1 The connectors are manufactured, identified and installed in accordance with this report and the manufacturer's published installation instructions. A copy of the manufacturer's published installation instructions must be available at the jobsite at all times during installation. In the event of a conflict between this report and the manufacturer's published installation instructions, this report governs.

5.2 Calculations showing compliance with this report must be submitted to the code official. The calculations must be prepared by a registered design professional where required by the statutes of the jurisdiction in which the project is to be constructed.

5.3 Connected wood members and fasteners must comply with Sections 3.25.2 and 3.25.3, respectively.

5.4 Adjustment factors noted in Section 4.1 of this report and the applicable codes must be considered, where applicable.

5.5 Use of connectors and fasteners with preservative-treated or fire-retardant-treated lumber must be in accordance with Section 3.25.4.

5.6 Connectors with factory welds are identified in Table 25 as being manufactured at the designated facilities under a quality-control program with inspections by ICC-ES.

6.0 EVIDENCE SUBMITTED

Data in accordance with the ICC-ES Acceptance Criteria for Joist Hangers and Similar Devices (AC13), dated October 2018 (editorially revised February 2024).

7.0 IDENTIFICATION

7.1 Each connector described in this report is identified by the product model (stock) number, the number of the ICC-ES index evaluation report for MiTek (ESR-2685), and by one or more of the following designations: MiTek, USP Structural Connectors, or USP.

7.2 The report holder's contact information is the following:

MITEK® INC.
16023 SWINGLEY RIDGE ROAD
CHESTERFIELD, MISSOURI 63017
(800) 328-5934
www.mitek-us.com

TABLE 1—BPH BEAM AND PURLIN HANGER ALLOWABLE LOADS[1,2,3,5]

STOCK NO.	STEEL GAGE	DIMENSIONS (in.)				FASTENER SCHEDULE				
						Header			Joist	
		W	H	D[4]	TF[4]	Top Qty.	Face Qty.	Type	Qty.	Type
BPH15925 – BPH1514	12	$1^{9}/_{16}$	$9^{1}/_{4}$ – 14	$2^{3}/_{8}$	$1^{1}/_{2}$	4	6	16d Com.	4	10d x $1^{1}/_{2}$
BPH17925 – BPH1716	12	$1^{13}/_{16}$	$9^{1}/_{4}$ – 16	$2^{3}/_{8}$	$1^{11}/_{16}$	4	6	16d Com.	4	10d x $1^{1}/_{2}$
BPH27925	12	$2^{3}/_{4}$	$9^{1}/_{4}$	$2^{3}/_{8}$	$2^{7}/_{16}$	4	6	16d Com.	4	10d x $1^{1}/_{2}$
BPH2795	12	$2^{3}/_{4}$	$9^{1}/_{2}$	$2^{3}/_{8}$	$2^{1}/_{8}$	4	6	16d Com.	4	10d x $1^{1}/_{2}$
BPH27112 – BPH2716	12	$2^{3}/_{4}$	$11^{1}/_{4}$ – 16	$2^{3}/_{8}$	$2^{1}/_{2}$	4	6	16d Com.	4	10d x $1^{1}/_{2}$
BPH31925 – BPH3114	12	$3^{1}/_{8}$	$9^{1}/_{4}$ – 14	3	$2^{3}/_{32}$	4	6	16d Com.	4	10d Com.
BPH35925 – BPH35118	12	$3^{9}/_{16}$	$9^{1}/_{4}$ – $11^{7}/_{8}$	$2^{3}/_{8}$	$2^{3}/_{8}$	4	6	16d Com.	4	10d Com.
BPH3512 – BPH3532	12	$3^{9}/_{16}$	12 – 32	$2^{3}/_{4}$	$2^{1}/_{32}$	4	6	16d Com.	6	10d Com.
BPH52925	12	$5^{3}/_{8}$	$9^{1}/_{4}$	$2^{3}/_{8}$	$2^{7}/_{16}$	4	6	16d Com.	4	10d Com.
BPH5295 – BPH5218	12	$5^{3}/_{8}$	$9^{1}/_{2}$ – 18	3	2	4	6	16d Com.	6	10d Com.
BPH5595	12	$5^{9}/_{16}$	$9^{1}/_{2}$	3	$2^{5}/_{32}$	4	6	16d Com.	4	10d Com.
BPH55118 – BPH5518	12	$5^{9}/_{16}$	$11^{7}/_{8}$ – 18	$2^{1}/_{2}$	$2^{1}/_{32}$	4	6	16d Com.	6	10d Com.
BPH71925 – BPH7195	12	$7^{1}/_{8}$	$9^{1}/_{4}$ – $9^{1}/_{2}$	3	$2^{3}/_{8}$	4	6	16d Com.	6	10d Com.
BPH7110	12	$7^{1}/_{8}$	10	$2^{1}/_{2}$	$2^{1}/_{2}$	4	6	16d Com.	6	10d Com.
BPH71112 – BPH7124	12	$7^{1}/_{8}$	$11^{1}/_{4}$ – 24	3	$2^{3}/_{16}$	4	6	16d Com.	6	10d Com.

STOCK NO.	ALLOWABLE LOADS (lbs.)						
	DF-L; $F_{c\text{-}perp}$ = 625 psi			LVL; $F_{c\text{-}perp}$ = 750 psi			Uplift
	C_D = 1.0	C_D = 1.15	C_D = 1.25	C_D = 1.0	C_D = 1.15	C_D = 1.25	C_D = 1.6
BPH15925 – BPH1514	2,825	2,830	2,830	2,830	2,830	2,830	850
BPH17925 – BPH1716	2,970	2,970	2,970	2,970	2,970	2,970	850
BPH27925	3,105	3,105	3,105	3,105	3,105	3,105	850
BPH2795	3,065	3,065	3,065	3,065	3,065	3,065	850
BPH27112 – BPH2716	3,105	3,105	3,105	3,105	3,105	3,105	850
BPH31925 – BPH3114	3,055	3,055	3,055	3,055	3,055	3,055	850
BPH35925 – BPH35118	3,100	3,100	3,100	3,100	3,100	3,100	850
BPH3512 – BPH3532	3,050	3,050	3,050	3,050	3,050	3,050	1,140
BPH52925	3,105	3,105	3,105	3,105	3,105	3,105	850
BPH5295 – BPH5218	3,050	3,050	3,050	3,050	3,050	3,050	1,275
BPH5595	3,065	3,065	3,065	3,065	3,065	3,065	850
BPH55118 – BPH5518	3,050	3,050	3,050	3,050	3,050	3,050	1,275
BPH71925 – BPH7195	3,100	3,100	3,100	3,100	3,100	3,100	1,275
BPH7110	3,250	3,250	3,250	3,250	3,250	3,250	1,275
BPH71112 – BPH7124	3,075	3,075	3,075	3,075	3,075	3,075	1,275

For **SI:** 1 inch = 25.4 mm, 1 lbf = 4.45 N, 1 psi = 6.895 kPa.

[1]Allowable loads have been adjusted for load duration factors, C_D, as shown, in accordance with the NDS. The allowable loads do not apply to loads of other durations, and are not permitted to be adjusted for other load durations. See Sections 4.1 and 4.2 for additional design and installation requirements.

[2]See Section 3.25.3 for required fastener dimensions and mechanical properties.

[3]Allowable loads shown are for installations in wood members complying with Section 3.25.2. Wood members must also have a minimum reference compression perpendicular to grain design value, $F_{c\text{-}perp}$, of either 625 psi (4.31 MPa), or 750 psi (5.17 MPa), as specified in the table above.

[4]The *D* and *TF* dimensions listed are the minimum values for hangers within the ranges of stock numbers shown.

[5]BPH Series hangers provide torsional resistance, which is defined as a moment of not less than 75 pounds (334 N) times the depth of the joist at which the lateral movement of the top or bottom of the joist with respect to the vertical position of the joist is 0.125 inch (3.2 mm). The height, H, of the joist hanger must be equal to the height of the joist to ensure proper attachment of the sheathing to the joist and supporting member.

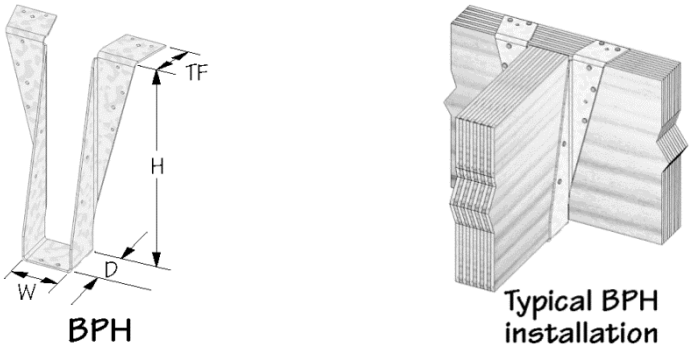

FIGURE 1—BPH BEAM AND PURLIN HANGER

TABLE 2A— BPHA BEAM AND PURLIN HANGER DIMENSIONS

STOCK NO.	STEEL GAGE	DIMENSIONS (in.)	
		W	H
BPHA15925-BPHA1514	12	$1^{9}/_{16}$	$9^{3}/_{16}$ - $13^{15}/_{16}$
BPHA17725-BPHA1716	12	$1^{13}/_{16}$	$7^{3}/_{16}$ - $15^{15}/_{16}$
BPHA2095-BPHA2016	12	$2^{1}/_{8}$	$9^{7}/_{16}$ - $15^{15}/_{16}$
BPHA2395-BPHA2318	12	$2^{3}/_{8}$	$9^{7}/_{16}$ - $19^{15}/_{16}$
BPHA25925-BPHA2528	12	$2^{9}/_{16}$	$9^{3}/_{16}$ - $27^{15}/_{16}$
BPHA31925-BPHA3114	12	$3^{1}/_{8}$	$9^{3}/_{16}$ - $13^{15}/_{16}$
BPHA35925-BPHA3532	12	$3^{9}/_{16}$	$9^{3}/_{16}$ - $31^{15}/_{16}$
BPHA2095-2 - BPHA2016-2	12	$4^{1}/_{8}$	$9^{7}/_{16}$ - $15^{15}/_{16}$
BPHA4295-BPHA4216	12	$4^{3}/_{8}$	$9^{7}/_{16}$ - $15^{15}/_{16}$
BPHA2395-2 - BPHA2320-2	12	$4^{3}/_{4}$	$9^{7}/_{16}$ - $19^{15}/_{16}$
BPHA55725-BPHA5526	12	$5^{9}/_{16}$	$7^{3}/_{16}$ - $25^{15}/_{16}$
BPHA71925-BPHA7124	12	$7^{1}/_{8}$	$9^{3}/_{16}$ - $23^{15}/_{16}$
BPHA310	12	$2^{9}/_{16}$	$9^{1}/_{8}$
BPHA210-2	12	$3^{1}/_{8}$	$9^{1}/_{8}$
BPHA48	12	$3^{9}/_{16}$	$7^{1}/_{8}$
BPHA410	12	$3^{9}/_{16}$	$9^{1}/_{8}$
BPHA412	12	$3^{9}/_{16}$	11

For **SI:** 1 in. = 25.4 mm

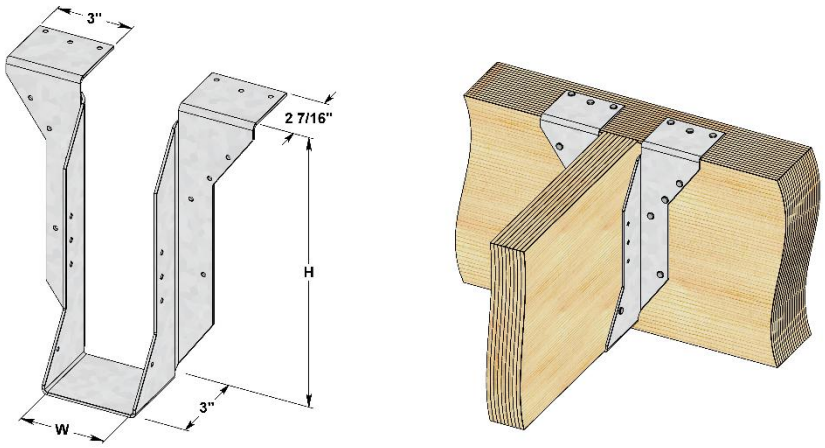

BPHA

Typical BPHA Installation

FIGURE 2—BPHA BEAM AND PURLIN HANGER AND TYPICAL INSTALLATION DETAIL

TABLE 2B—BPHA BEAM AND PURLIN HANGER FASTENER SCHEDULE AND ALLOWABLE LOADS[1,2,3,4]

STOCK NO.	Fastener Schedule						ALLOWABLE LOADS (lbs.)						
	Header			Nail Config.	Joist		DF-L; $F_{c\text{-}perp}$ = 625 psi			LVL; $F_{c\text{-}perp}$ = 750 psi			Uplift
	Top Qty.	Face Qty.	Type		Qty.	Type	C_D = 1.0	C_D = 1.15	C_D = 1.25	C_D = 1.0	C_D = 1.15	C_D = 1.25	C_D = 1.60
BPHA15925-BPHA1514	6	8	10d Com.	Min	2	10d x 1 1/2	3,110	3,145	3,165	3,675	3,705	3,730	245
				Max	8		4,005	4,135	4,225	4,565	4,700	4,785	1,665
			16d Com.	Min	2		3,110	3,145	3,165	3,675	3,705	3,730	245
				Max	8		4,005	4,135	4,225	4,565	4,700	4,785	1,665
BPHA17725-BPHA1716	6	8	10d Com.	Min	2	10d x 1 1/2	3,580	3,610	3,635	4,235	4,270	4,290	245
				Max	8		4,475	4,605	4,690	4,975	4,975	4,975	1,665
			16d Com.	Min	2		3,580	3,610	3,635	4,235	4,270	4,290	245
				Max	8		4,475	4,605	4,690	5,130	5,260	5,270	1,665
BPHA2095-BPHA2016	6	8	10d Com.	Min	2	10d x 1 1/2	4,050	4,080	4,105	4,800	4,830	4,855	245
				Max	8		4,940	4,975	4,975	4,975	4,975	4,975	1,665
			16d Com.	Min	2		4,050	4,080	4,105	4,800	4,830	4,855	245
				Max	8		4,940	5,075	5,160	5,270	5,270	5,270	1,665
BPHA2395-BPHA2318	6	8	10d Com.	Min	2	10d x 1 1/2	4,635	4,665	4,690	4,975	4,975	4,975	245
				Max	8		4,975	4,975	4,975	4,975	4,975	4,975	1,665
			16d Com.	Min	2		4,635	4,665	4,690	5,270	5,270	5,270	245
				Max	8		5,270	5,270	5,270	5,270	5,270	5,270	1,665
BPHA25925-BPHA2528	6	8	10d Com.	Min	2	10d x 1 1/2	4,975	4,975	4,975	4,975	4,975	4,975	245
				Max	8		4,975	4,975	4,975	4,975	4,975	4,975	1,665
			16d Com.	Min	2		4,985	5,020	5,040	5,270	5,270	5,270	245
				Max	8		5,270	5,270	5,270	5,270	5,270	5,270	1,665
BPHA31925-BPHA3114 BPHA35925-BPHA3532 BPHA2095-2 - BPHA2016-2 BPHA4295-BPHA4216 BPHA2395-2 - BPHA2320-2 BPHA55725-BPHA5526 BPHA71925-BPHA7124 BPHA210-2 BPHA48 BPHA410 BPHA412	6	8	10d Com.	Min	2	10d x 1 1/2	4,975	4,975	4,975	4,975	4,975	4,975	245
				Max	8		4,975	4,975	4,975	4,975	4,975	4,975	1,665
			16d Com.	Min	2		5,270	5,270	5,270	5,270	5,270	5,270	245
				Max	8		5,270	5,270	5,270	5,270	5,270	5,270	1,665
BPHA310	6	8	10d Com.	Min	2	10d x 1 1/2	4,975	4,975	4,975	4,975	4,975	4,975	245
				Max	8		4,975	4,975	4,975	4,975	4,975	4,975	1,665
			16d Com.	Min	2		4,985	5,020	5,040	5,270	5,270	5,270	245
				Max	8		5,270	5,270	5,270	5,270	5,270	5,270	1,665

For **SI:** 1 inch = 25.4 mm, 1 lbf = 4.45 N, 1 psi = 6.895 kPa.

[1]Allowable loads have been adjusted for load duration factors, C_D, as shown, in accordance with the NDS. The allowable loads do not apply to loads of other durations, and are not permitted to be adjusted for other load durations. See Sections 4.1 and 4.2 for additional design and installation requirements.

[2]Allowable loads shown are for installations in wood members complying with Section 3.25.2. This Table assumes a minimum reference compression perpendicular to grain design value, $F_{c\text{-}perp}$, of either 625 psi (4.31 MPa) for header material, and 750 psi (5.17 MPa) for joist material.

[3]See Section 3.25.3 for required fastener dimensions and mechanical properties.

[4]The BPHA hangers provide torsional resistance, which is defined as a moment of not less than 75 pounds (334 N) times the depth of the carried member at which the lateral movement of the top or bottom of the carried member with respect to the vertical position of the joist is 0.125 inch (3.2 mm).

TABLE 3—HBPH BEAM AND PURLIN HANGER ALLOWABLE LOADS[1,2,3,4,5]

STOCK NO.	STEEL GAGE	DIMENSIONS (IN)				FASTENER SCHEDULE					ALLOWABLE LOADS (lbs.)			
						Header			Joist		$F_{C^\wedge}$ = 625 psi			Uplift
		W	H	D	TF	Top	Face	Type	Qty	Type	100%	115%	125%	160%
HBPH35925	10	3 9/16	9 1/4	3 1/2	3	6	16	16d Com.	10	16d Com.	6,310	6,310	6,310	2,705
HBPH3595	10	3 9/16	9 1/2	3 1/2	3	6	16	16d Com.	10	16d Com.	6,310	6,310	6,310	2,705
HBPH35112	10	3 9/16	11 1/4	3 1/2	3	6	16	16d Com.	10	16d Com.	6,310	6,310	6,310	2,705
HBPH35118	10	3 9/16	11 7/8	3 1/2	3	6	16	16d Com.	10	16d Com.	6,310	6,310	6,310	2,705
HBPH3512	10	3 9/16	12	3 1/2	3	6	16	16d Com.	10	16d Com.	6,310	6,310	6,310	2,705
HBPH3514	10	3 9/16	14	3 1/2	3	6	16	16d Com.	10	16d Com.	6,310	6,310	6,310	2,705
HBPH3516	10	3 9/16	16	3 1/2	3	6	16	16d Com.	10	16d Com.	6,310	6,310	6,310	2,705
HBPH3518	10	3 9/16	18	3 1/2	3	6	16	16d Com.	10	16d Com.	6,310	6,310	6,310	2,705
HBPH3520	10	3 9/16	20	3 1/2	3	6	16	16d Com.	10	16d Com.	6,310	6,310	6,310	2,705
HBPH3522	10	3 9/16	22	3 1/2	3	6	16	16d Com.	10	16d Com.	6,310	6,310	6,310	2,705
HBPH3524	10	3 9/16	24	3 1/2	3	6	16	16d Com.	10	16d Com.	6,310	6,310	6,310	2,705
HBPH3526	10	3 9/16	26	3 1/2	3	6	16	16d Com.	10	16d Com.	6,310	6,310	6,310	2,705
HBPH3528	10	3 9/16	28	3 1/2	3	6	16	16d Com.	10	16d Com.	6,310	6,310	6,310	2,705
HBPH3530	10	3 9/16	30	3 1/2	3	6	16	16d Com.	10	16d Com.	6,310	6,310	6,310	2,705
HBPH5116	10	5 1/8	16	3 1/2	3	6	16	16d Com.	10	16d Com.	6,185	6,185	6,185	2,705
HBPH5118	10	5 1/8	18	3 1/2	3	6	16	16d Com.	10	16d Com.	6,185	6,185	6,185	2,705
HBPH5120	10	5 1/8	20	3 1/2	3	6	16	16d Com.	10	16d Com.	6,185	6,185	6,185	2,705
HBPH5122	10	5 1/8	22	3 1/2	3	6	16	16d Com.	10	16d Com.	6,185	6,185	6,185	2,705
HBPH5124	10	5 1/8	24	3 1/2	3	6	16	16d Com.	10	16d Com.	6,185	6,185	6,185	2,705
HBPH5126	10	5 1/8	26	3 1/2	3	6	16	16d Com.	10	16d Com.	6,185	6,185	6,185	2,705
HBPH5128	10	5 1/8	28	3 1/2	3	6	16	16d Com.	10	16d Com.	6,185	6,185	6,185	2,705
HBPH5130	10	5 1/8	30	3 1/2	3	6	16	16d Com.	10	16d Com.	6,185	6,185	6,185	2,705
HBPH55725	10	5 1/2	7 1/4	3 1/2	3	6	16	16d Com.	10	16d Com.	6,185	6,185	6,185	2,705
HBPH55925	10	5 1/2	9 1/4	3 1/2	3	6	16	16d Com.	10	16d Com.	6,185	6,185	6,185	2,705
HBPH5595	10	5 1/2	9 1/2	3 1/2	3	6	16	16d Com.	10	16d Com.	6,185	6,185	6,185	2,705
HBPH55112	10	5 1/2	11 1/4	3 1/2	3	6	16	16d Com.	10	16d Com.	6,185	6,185	6,185	2,705
HBPH55118	10	5 1/2	11 7/8	3 1/2	3	6	16	16d Com.	10	16d Com.	6,185	6,185	6,185	2,705
HBPH5512	10	5 1/2	12	3 1/2	3	6	16	16d Com.	10	16d Com.	6,185	6,185	6,185	2,705
HBPH5514	10	5 1/2	14	3 1/2	3	6	16	16d Com.	10	16d Com.	6,185	6,185	6,185	2,705
HBPH5516	10	5 1/2	16	3 1/2	3	6	16	16d Com.	10	16d Com.	6,185	6,185	6,185	2,705
HBPH5518	10	5 1/2	18	3 1/2	3	6	16	16d Com.	10	16d Com.	6,185	6,185	6,185	2,705
HBPH5520	10	5 1/2	20	3 1/2	3	6	16	16d Com.	10	16d Com.	6,185	6,185	6,185	2,705
HBPH71925	10	7 1/8	9 1/4	3 1/2	3	6	16	16d Com.	10	16d Com.	6,185	6,185	6,185	2,705
HBPH7195	10	7 1/8	9 1/2	3 1/2	3	6	16	16d Com.	10	16d Com.	6,185	6,185	6,185	2,705
HBPH71112	10	7 1/8	11 1/4	3 1/2	3	6	16	16d Com.	10	16d Com.	6,185	6,185	6,185	2,705
HBPH71118	10	7 1/8	11 7/8	3 1/2	3	6	16	16d Com.	10	16d Com.	6,185	6,185	6,185	2,705
HBPH7114	10	7 1/8	14	3 1/2	3	6	16	16d Com.	10	16d Com.	6,185	6,185	6,185	2,705
HBPH7116	10	7 1/8	16	3 1/2	3	6	16	16d Com.	10	16d Com.	6,185	6,185	6,185	2,705
HBPH7118	10	7 1/8	18	3 1/2	3	6	16	16d Com.	10	16d Com.	6,185	6,185	6,185	2,705
HBPH7120	10	7 1/8	20	3 1/2	3	6	16	16d Com.	10	16d Com.	6,185	6,185	6,185	2,705
HBPH7122	10	7 1/8	22	3 1/2	3	6	16	16d Com.	10	16d Com.	6,185	6,185	6,185	2,705
HBPH7124	10	7 1/8	24	3 1/2	3	6	16	16d Com.	10	16d Com.	6,185	6,185	6,185	2,705
HBPH7126	10	7 1/8	26	3 1/2	3	6	16	16d Com.	10	16d Com.	6,185	6,185	6,185	2,705
HBPH7128	10	7 1/8	28	3 1/2	3	6	16	16d Com.	10	16d Com.	6,185	6,185	6,185	2,705

For **SI:** 1 inch = 25.4 mm, 1 lbf = 4.45 N, 1 psi = 6.895 kPa.

[1]Allowable loads have been adjusted for load duration factors, C_D, as shown, in accordance with the NDS. The allowable loads do not apply to loads of other durations, and are not permitted to be adjusted for other load durations. See Sections 4.1 and 4.2 for additional design and installation requirements.
[2]See Section 3.25.3 for required fastener dimensions and mechanical properties.
[3]Allowable loads shown are for installations in wood members complying with Section 3.25.2. Wood members must also have a minimum reference compression perpendicular to grain design value, $F_{c\text{-}perp}$, of 625 psi (4.31 MPa), as specified in the table above.
[4]The *D* and *TF* dimensions listed are the minimum values for hangers within the ranges of stock numbers shown.
[5]HBPH Series hangers provide torsional resistance, which is defined as a moment of not less than 75 pounds (334 N) times the depth of the joist at which the lateral movement of the top or bottom of the joist with respect to the vertical position of the joist is 0.125 inch (3.2 mm). The height, H, of the joist hanger must be equal to the height of the joist to ensure proper attachment of the sheathing to the joist and supporting member.

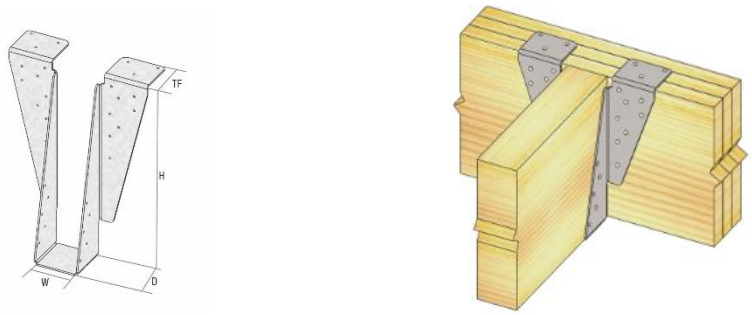

FIGURE 3—HBPH BEAM AND PURLIN HANGER AND TYPICAL INSTALLATION DETAIL

TABLE 4—HDO TOP MOUNT HANGER ALLOWABLE LOADS[1,2,3,4,5]

STOCK NO.	STEEL GAGE	DIMENSIONS (inches)					FASTENER SCHEDULE					ALLOWABLE LOADS (lbs.)						
							Header			Joist		$F_{C\text{-}PERP}$ = 460 psi			$F_{C\text{-}PERP}$ = 625 psi			Uplift
		W	H	D	A	T.F.	Top	Face	Type	Qty	Type	C_D = 1.0	C_D = 1.15	C_D = 1.25	C_D = 1.0	C_D = 1.15	C_D = 1.25	C_D = 1.6
HDO24	12	1 9/16	3 7/16	2 1/4	1 1/4	2 1/2	4	2	16d Common	2	10dx1 1/2	1,850	1,885	1,905	2,405	2,440	2,460	330
HDO26	12	1 9/16	5 3/8	2 1/4	1 1/4	2 1/2	4	6	16d Common	4	10dx1 1/2	2,150	2,215	2,260	2,705	2,770	2,815	825
HDO28	12	1 9/16	7 1/8	2 1/4	1 1/4	2 1/2	4	6	16d Common	4	10dx1 1/2	2,150	2,215	2,260	2,705	2,770	2,815	825
HDO210	12	1 9/16	9 1/8	2 1/4	1 1/4	2 1/2	4	8	16d Common	4	10dx1 1/2	2,150	2,215	2,260	2,705	2,770	2,815	825
HDO212	12	1 9/16	11	2 1/4	1 1/4	2 1/2	4	10	16d Common	6	10dx1 1/2	2,445	2,545	2,610	3,005	3,105	3,165	1,190
HDO214	12	1 9/16	13	2 1/4	1 1/4	2 1/2	4	12	16d Common	6	10dx1 1/2	2,445	2,545	2,610	3,005	3,105	3,140	1,190
HDO216	12	1 9/16	15	2 1/4	1 1/4	2 1/2	4	14	16d Common	8	10dx1 1/2	2,745	2,875	2,965	3,300	3,435	3,520	1,700
HDO34	12	2 9/16	3 7/16	2 1/2	1 1/4	2 1/2	4	4	16d Common	2	10dx1 1/2	2,965	2,965	2,965	2,965	2,965	2,965	330
HDO36	12	2 9/16	5 3/8	2 1/2	1 1/4	2 1/2	4	6	16d Common	4	10dx1 1/2	3,455	3,535	3,580	4,125	4,320	4,450	825
HDO38	12	2 9/16	7 1/8	2 1/2	1 1/4	2 1/2	4	8	16d Common	4	10dx1 1/2	3,470	3,535	3,580	4,465	4,570	4,575	825
HDO310	12	2 9/16	9 1/8	2 1/2	1 1/4	2 1/2	4	10	16d Common	6	10dx1 1/2	3,770	3,870	3,935	4,575	4,575	4,575	1,065
HDO312	12	2 9/16	11	2 1/2	1 1/4	2 1/2	4	12	16d Common	6	10dx1 1/2	3,770	3,870	3,935	4,800	4,900	4,965	1,115
HDO314	12	2 9/16	13	2 1/2	1 1/4	2 1/2	4	14	16d Common	8	10dx1 1/2	4,065	4,200	4,285	5,100	5,230	5,315	1,115
HDO316	12	2 9/16	15	2 1/2	1 1/4	2 1/2	4	16	16d Common	8	10dx1 1/2	4,065	4,200	4,285	5,100	5,230	5,315	1,700
HDO24-2	12	3 1/8	3 7/16	2 1/4	1 1/4	2 1/2	4	4	16d Common	2	10d Common	2,965	2,965	2,965	2,965	2,965	2,965	400
HDO26-2	12	3 1/8	5 3/8	2 1/4	1 1/4	2 1/2	4	6	16d Common	4	10d Common	3,455	3,650	3,780	4,125	4,320	4,450	825
HDO28-2	12	3 1/8	7 1/8	2 1/4	1 1/4	2 1/2	4	8	16d Common	4	10d Common	3,700	3,765	3,810	4,465	4,575	4,575	825
HDO210-2	12	3 1/8	9 1/8	2 1/4	1 1/4	2 1/2	4	10	16d Common	6	10d Common	4,000	4,100	4,165	4,575	4,575	4,575	1,275
HDO212-2	12	3 1/8	11	2 1/2	1 1/4	2 1/2	4	12	16d Common	6	10d Common	4,345	4,445	4,510	5,155	5,465	5,675	1,275
HDO214-2	12	3 1/8	13	2 1/2	1 1/4	2 1/2	4	14	16d Common	8	10d Common	4,640	4,775	4,860	5,500	5,845	6,080	1,510
HDO216-2	12	3 1/8	15	2 1/2	1 1/4	2 1/2	4	16	16d Common	8	10d Common	4,640	4,775	4,860	5,845	6,010	6,100	1,700
HDO44	12	3 9/16	3 7/16	2 1/4	1 1/4	2 1/2	4	4	16d Common	2	10d Common	2,965	2,965	2,965	2,965	2,965	2,965	400
HDO46	12	3 9/16	5 3/8	2 1/4	1 1/4	2 1/2	4	6	16d Common	4	10d Common	3,455	3,650	3,780	4,125	4,320	4,450	825
HDO48	12	3 9/16	7 1/8	2 1/4	1 1/4	2 1/2	4	8	16d Common	4	10d Common	3,795	4,030	4,190	4,465	4,575	4,575	825
HDO410	12	3 9/16	9 1/8	2 1/4	1 1/4	2 1/2	4	10	16d Common	6	10d Common	4,140	4,415	4,595	4,785	4,785	4,785	1,275
HDO412	12	3 9/16	11	2 1/4	1 1/4	2 1/2	4	12	16d Common	6	10d Common	4,485	4,615	4,680	5,155	5,465	5,675	1,275
HDO414	12	3 9/16	13	2 1/2	1 1/4	2 1/2	4	14	16d Common	8	10d Common	4,830	5,175	5,410	5,500	5,845	6,080	1,510
HDO416	12	3 9/16	15	2 1/2	1 1/4	2 1/2	4	16	16d Common	8	10d Common	5,175	5,350	5,435	5,845	6,230	6,460	1,700
HDO210-3	12	4 11/16	9 1/8	2 1/2	1 1/4	2 1/2	4	10	16d Common	6	16d Common	4,140	4,415	4,565	4,575	4,575	4,575	1,450
HDO212-3	12	4 11/16	11	2 1/2	1 1/4	2 1/2	4	12	16d Common	6	16d Common	4,485	4,795	5,005	5,155	5,465	5,675	1,490
HDO214-3	12	4 11/16	13	2 1/2	1 1/4	2 1/2	4	14	16d Common	8	16d Common	4,830	5,175	5,410	5,500	5,845	6,080	1,985
HDO216-3	12	4 11/16	15	2 1/2	1 1/4	2 1/2	4	16	16d Common	8	16d Common	5,175	5,560	5,820	5,845	6,230	6,460	1,985
HDO66	12	5 1/2	5 3/8	2 1/2	1 1/4	2 1/2	4	6	16d Common	4	16d Common	3,455	3,650	3,780	4,125	4,320	4,450	990
HDO68	12	5 1/2	7 1/8	2 1/2	1 1/4	2 1/2	4	8	16d Common	4	16d Common	3,795	4,030	4,190	4,465	4,575	4,575	990
HDO610	12	5 1/2	9 1/8	2 1/2	1 1/4	2 1/2	4	10	16d Common	6	16d Common	4,140	4,415	4,565	4,575	4,575	4,575	1,450
HDO612	12	5 1/2	11	2 1/2	1 1/4	2 1/2	4	12	16d Common	6	16d Common	4,485	4,795	5,005	5,155	5,465	5,675	1,365
HDO614	12	5 1/2	13	2 1/2	1 1/4	2 1/2	4	14	16d Common	8	16d Common	4,830	5,175	5,410	5,500	5,845	6,080	1,510
HDO616	12	5 1/2	15	2 1/2	1 1/4	2 1/2	4	16	16d Common	8	16d Common	5,175	5,560	5,820	5,845	6,230	6,460	1,830

For **SI:** 1 inch = 25.4mm, 1 lbf = 4.45 N, 1 psi = 6.895 kPa.

[1]Allowable loads have been adjusted for load duration factors, C_D, as shown, in accordance with NDS. The allowable loads do not apply to loads of other durations, and are not permitted to be adjusted for other load durations. See sections 4.1 and 4.2 for additional design and installation requirements.

[2]See Section 3.25.3 for required fastener dimensions and mechanical properties.

[3]Allowable loads shown are for installations in wood members complying with Section 3.25.2. Wood members must also have a minimum reference compression perpendicular to grain design value, $F_{c\text{-}perp}$, of either 460 psi (3.17 MPa), or 625 psi (4.31 MPa), as specified in the table above.

[4]HDO hangers provide torsional resistance up to a maximum joist depth of H + 1 inch (H + 25.4 mm), where torsional resistance is defined as a moment not less than 75 pounds (334 N) times the depth of the joist at which the lateral movement of the top or bottom of the joist with respect to the vertical position of the joist is 0.125 inch (3.2 mm).

[5]HDOIF inverted flange hangers are available in widths of 3.125 inches (79.4 mm) or greater at the same design loads as corresponding HDO models.

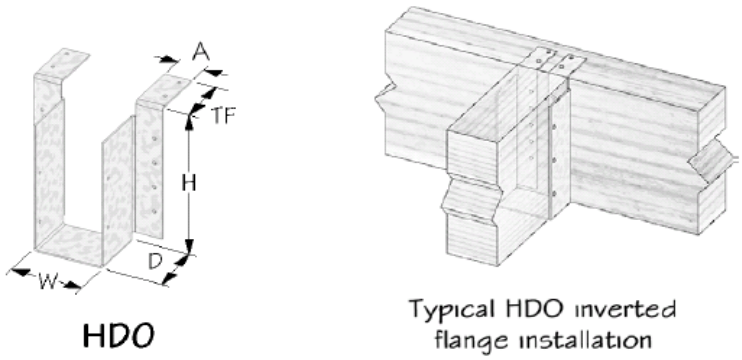

FIGURE 4—HDO TOP MOUNT HANGER

TABLE 5—HL LIGHT GAGE PURLIN HANGER ALLOWABLE LOADS[1,2,3]

STOCK NO.	STEEL GA.	DIMENSIONS (inches)				FASTENER SCHEDULE				ALLOWABLE DOWNWARD LOAD (lbs)		
						Header		Joist				
		W	H	D	TF	Qty	Type	Qty	Type	C_D = 1.0	C_D = 1.15	C_D = 1.25
HL26	18	$1^9/_{16}$	$5^3/_8$	$1^1/_2$	$1^5/_{16}$	6	16d Common	----	----	1,255	1,255	1,255
HL28	18	$1^9/_{16}$	$7^5/_{16}$	$1^3/_4$	$1^5/_{16}$	6	16d Common	----	----	1,490	1,490	1,490
HL210	18	$1^9/_{16}$	$9^5/_{16}$	2	$1^5/_{16}$	6	16d Common	----	----	1,490	1,490	1,490
HL212	18	$1^9/_{16}$	$11^1/_4$	$2^1/_8$	$1^5/_{16}$	6	16d Common	----	----	1,490	1,490	1,490
HL214	18	$1^9/_{16}$	$13^1/_8$	2	$2^1/_2$	8	16d Common	2	10d x $1^1/_2$	1,490	1,490	1,490

For **SI:** 1 inch = 25.4 mm, 1 lbf = 4.45 N.

[1]Allowable loads have been adjusted for load duration factors, C_D, as shown, in accordance with the NDS. The allowable loads do not apply to loads of other durations, and are not permitted to be adjusted for other load durations. See Sections 4.1 and 4.2 for design and installation requirements.
[2]See Section 3.25.3 for required fastener dimensions and mechanical properties.
[3]Allowable loads shown are for installations in wood members complying with Section 3.25.2. Wood members must also have a reference compression perpendicular to grain design value, $F_{c\text{-}perp}$, of 625 psi (4.31 MPa) or greater.

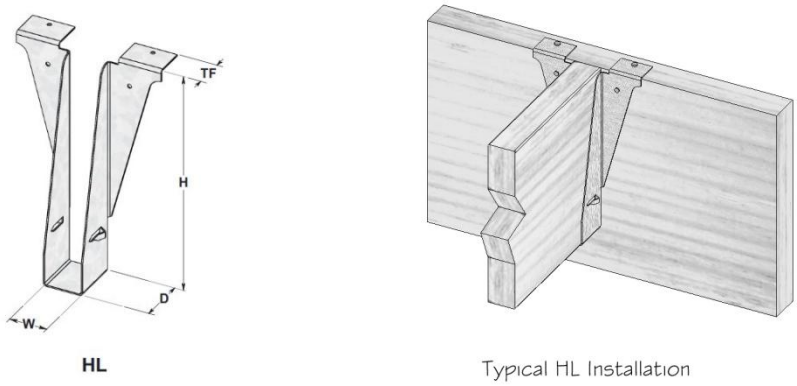

FIGURE 5—HL LIGHT GAGE PURLIN HANGER

TABLE 6—HLBH BEAM HANGER ALLOWABLE LOADS[1,2,3,5]

STOCK NO.	STEEL GAGE	DIMENSIONS (inches)					FASTENER SCHEDULE				
							Header			Joist	
		W	H	D	L	TF	Top Qty.	Face Qty.	Type [4]	Qty.	Type
Installations in Parallel Strand Lumber (PSL)											
HLBH-27xxx	7	$2^3/_4$	$9^1/_4$ - 30	6	12	$2^3/_4$	3	12	$3^1/_2$" P-F nail	6	10d x $1^1/_2$
HLBH-35xxx	7	$3^5/_8$	$9^1/_4$ - 30	6	12	$3^1/_8$	3	12	$3^1/_2$" P-F nail	6	16d Common
HLBH-52xxx	7	$5^3/_8$	$9^1/_4$ - 30	6	12	$3^1/_8$	3	12	$3^1/_2$" P-F nail	6	16d Common
HLBH-71xxx	7	$7^1/_8$	$9^1/_4$ - 32	6	12	$3^1/_8$	3	12	$3^1/_2$" P-F nail	6	16d Common
Installations in Laminated Veneer Lumber (LVL)											
HLBH-35xxx	7	$3^5/_8$	$9^1/_4$ - 30	6	12	$3^1/_8$	3	12	$3^1/_2$" P-F nail	6	16d Common
HLBH-52xxx	7	$5^3/_8$	$9^1/_4$ - 30	6	12	$3^1/_8$	3	12	$3^1/_2$" P-F nail	6	16d Common
HLBH-55xxx	7	$5^9/_{16}$	$9^1/_4$ - 30	6	12	$3^1/_8$	3	12	$3^1/_2$" P-F nail	6	16d Common
HLBH-71xxx	7	$7^1/_8$	$9^1/_4$ - 30	6	12	$3^1/_8$	3	12	$3^1/_2$" P-F nail	6	16d Common

STOCK NO.	ALLOWABLE LOADS (lbs)									
	$F_{c\text{-perp}}$ = 460 psi			$F_{c\text{-perp}}$ = 560 psi			$F_{c\text{-perp}}$ = 625 psi			Uplift
	C_D = 1.0	C_D = 1.15	C_D = 1.25	C_D = 1.0	C_D = 1.15	C_D = 1.25	C_D = 1.0	C_D = 1.15	C_D = 1.25	C_D = 1.6
Installations in Parallel Strand Lumber (PSL)										
HLBH-27xxx	8,420	8,715	8,815	9,770	10,045	10,045	10,045	10,045	10,045	1,115
HLBH-35xxx	9,500	9,820	10,040	10,045	10,045	10,045	10,045	10,045	10,045	1,420
HLBH-52xxx	9,500	9,820	10,040	10,045	10,045	10,045	10,045	10,045	10,045	1,580
HLBH-71xxx	9,500	9,820	10,040	10,045	10,045	10,045	10,045	10,045	10,045	1,580
Installations in Laminated Veneer Lumber (LVL)										
HLBH-35xxx	9,500	9,820	10,040	10,045	10,045	10,045	10,045	10,045	10,045	1,420
HLBH-52xxx	9,500	9,820	10,040	10,045	10,045	10,045	10,045	10,045	10,045	1,580
HLBH-55xxx	9,500	9,820	10,040	10,045	10,045	10,045	10,045	10,045	10,045	1,580
HLBH-71xxx	9,500	9,820	10,040	10,045	10,045	10,045	10,045	10,045	10,045	1,580

For **SI:** 1 inch = 25.4 mm, 1 lbf = 4.45 N, 1 psi = 6.895 kPa.

[1]Allowable loads have been adjusted for load duration factors, C_D, as shown, in accordance with the NDS. The allowable loads do not apply to loads of other durations, and are not permitted to be adjusted for other load durations. See Sections 4.1 and 4.2 for additional design and installation requirements.

[2]See Section 3.25.3 for required fastener dimensions and mechanical properties.

[3]Allowable loads shown are for installations in wood members complying with Section 3.25.2. Wood members must also have a minimum reference compression perpendicular to grain design value, $F_{c\text{-perp}}$, of either 460 psi (3.17 MPa), 560 psi (3.86 MPa), or 625 psi (4.31 MPa),as specified in the table above.

[4]Requires the use of $3^1/_2$-inch-long (88.9 mm) hardened post-frame ring shank nails complying with ASTM F1667 into the header.

[5]HLBH Series hangers provide torsional resistance, which is defined as a moment of not less than 75 pounds (334 N) times the depth of the joist at which the lateral movement of the top or bottom of the joist with respect to the vertical position of the joist is 0.125 inch (3.2 mm). The height, H, of the joist hanger must be equal to the height of the joist to ensure proper attachment of the sheathing to the joist and supporting member.

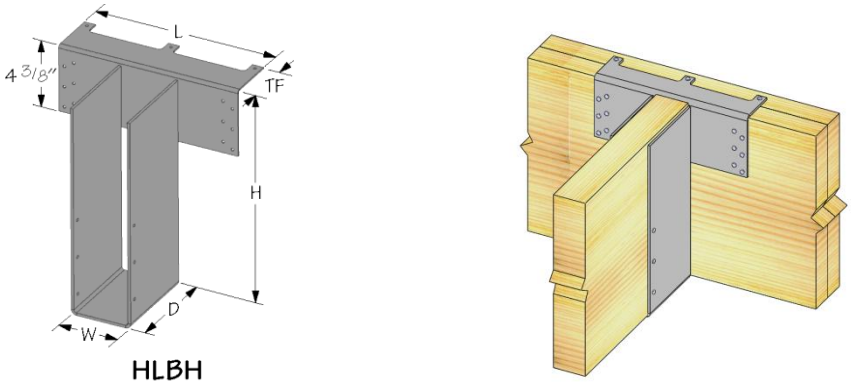

FIGURE 6—HLBH BEAM HANGERS

TABLE 7—JDS PURLIN HANGER

STOCK NO.	STEEL GAGE	DIMENSIONS (in.)				PURLIN(S)		MIN/ MAX	FASTENER SCHEDULE[2]					ALLOWABLE LOADS (lbs)[1,3,4]			
									Header			Joist		Download			Uplift
		W	H	D	TF	Qty	Nom. Size		Qty Top	Qty Face	Type	Qty	Type	C_D = 1.0	C_D = 1.15	C_D = 1.25	C_D = 1.6
JDS24S	18	$1^9/_{16}$	$3^1/_2$	$1^1/_4$	$^3/_4$	1	2 x 4	Min	2	2	10d x$1^1/_2$	2	10d x$1^1/_2$	500	500	500	325
								Max	2	0		2	10d Com.	575	605	625	450
JDS26S	18	$1^9/_{16}$	$5^1/_2$	$1^1/_4$	$^3/_4$	1	2 x 6	Min	2	2	10d x$1^1/_2$	4	10d x$1^1/_2$	615	615	615	420
								Max	2	0		4	10d Com.	775	830	870	745
JDS24	18	$1^9/_{16}$	$3^1/_2$	$1^1/_4$	$1^9/_{16}$	2	2 x 4	Min	2	2	10d x$1^1/_2$	2	10d x$1^1/_2$	1000	1000	1000	370
								Max	4	0		2	10d Com.	1185	1245	1285	900
JDS26	18	$1^9/_{16}$	$5^1/_2$	$1^1/_4$	$1^9/_{16}$	2	2 x 6	Min	2	2	10d x$1^1/_2$	4	10d x$1^1/_2$	1235	1235	1235	740
								Max	4	0		4	10d Com.	1575	1695	1775	1490
JDS26-175	18	$1^9/_{16}$	$5^7/_{16}$	$1^1/_4$	$1^3/_4$	2	2 x 6	Min	2	2	10d x$1^1/_2$	4	10d x$1^1/_2$	1235	1235	1235	740
								Max	4	0		4	10d Com.	1675	1790	1870	1490

For **SI:** 1 inch = 25.4 mm, 1 lbf = 4.45 N, 1 psi = 6.895 kPa.

[1]Allowable loads have been adjusted for load duration factors, C_D, as shown, in accordance with the NDS. The allowable loads do not apply to loads of other durations and are not permitted to be adjusted for other load durations. See Sections 4.1 and 4.2 for additional design and installations requirements.

[2]Fastener schedule includes options for minimum (Min) and maximum (Max) allowable loads. The joist hangers are not intended for use with intermediate numbers of fasteners.

[3]Allowable loads shown are for installations in wood members complying with Section 3.25.2 and are based on the use of wood members with a reference compression perpendicular to grain design value, $F_{c\text{-}perp}$, of 625 psi or greater.

[4]JDS hangers provide torsional resistance, where torsional resistance is defined as a moment not less than 75 pounds (334 N) times the depth of the hanger, at which the lateral movement of the top or bottom of the joist with respect to the vertical position of the joist is 0.125 inch (3.2 mm).

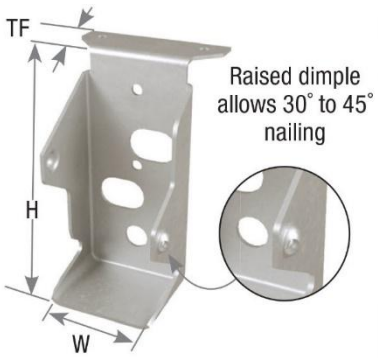

JDS24S Purlin Hanger

Typical JDS26S Single-Sided Installation

Typical JDS26 / JDS26-175 Installation

FIGURE 7—JDS PURLIN HANGER

TABLE 8—JH JOIST HANGER ALLOWABLE LOADS[5]

STOCK NUMBER	STEEL GAGE	DIMENSIONS (inches)					HEADER SIZE	FASTENER SCHEDULE						ALLOWABLE LOADS (lbs.)[1,3]			
								Header				Joist		Download			Uplift
								Top		Face							
		W	H	D	B	TF		Qty	Type[2]	Qty	Type[2]	Qty	Type[2,4]	C_D = 1.00	C_D = 1.15	C_D = 1.25	C_D = 1.60
JH20	18	$1^9/_{16}$	$10^1/_{16}$	$2^1/_4$	$5^1/_8$	$1^3/_{16}$	2 x 6	2	10d common	4	10d common	6	10d common	1,910	2,070	2,175	1,300
						$1^7/_{16}$	2 x 8	2	10d common	8	10d common	6	10d common	2,555	2,780	2,935	1,300
						$^7/_{16}$	2 x 10	2	10d common	12	10d common	6	10d common	2,295	2,595	2,790	1,300
						- -	2 x 12	- -	- -	14	10d common	6	10d common	2,210	2,545	2,765	1,300
JH30	18	$3^1/_4$	$10^3/_{16}$	$2^1/_4$	$4^1/_4$	$1^5/_{16}$	2 x 6	2	10d common	6	10d common	6	10d common	2,230	2,425	2,555	1,285
						$1^9/_{16}$	2 x 8	2	10d common	10	10d common	6	10d common	2,875	2,900	2,900	1,285
						$^9/_{16}$	2 x 10	2	10d common	14	10d common	6	10d common	2,620	2,900	2,900	1,285
						- -	2 x 12	- -	- -	16	10d common	6	10d common	2,445	2,810	2,900	1,285

For **SI:** 1 inch = 25.4 mm, 1 lbf = 4.45 N.

[1]Allowable loads have been adjusted for load duration factors, C_D, as shown, in accordance with the NDS, and are not permitted to be adjusted for other load durations. See Section 4.1 for additional design requirements.
[2]Allowable loads shown are for installations in sawn lumber or structural composite lumber complying with Section 3.25.2. Wood members must also have a minimum reference compression perpendicular to grain design value, $F_{c\text{-}perp}$, of 625 psi (4.31 MPa), or greater.
[3]See Section 3.25.3 for required nail dimensions and mechanical properties.
[4]Joist nails must be driven horizontally into the joist at a 30- to 45-degree angle, such that they penetrate through the joist, and into the header.
[5]The hangers provide torsional resistance up to a maximum joist depth of H + 1 inch (H + 25.4 mm), where torsional resistance is defined as a moment not less than 75 pounds (334 N) times the depth of the joist at which the lateral movement of the top or bottom of the joist with respect to the vertical position of the joist is 0.125 inch (3.2 mm).

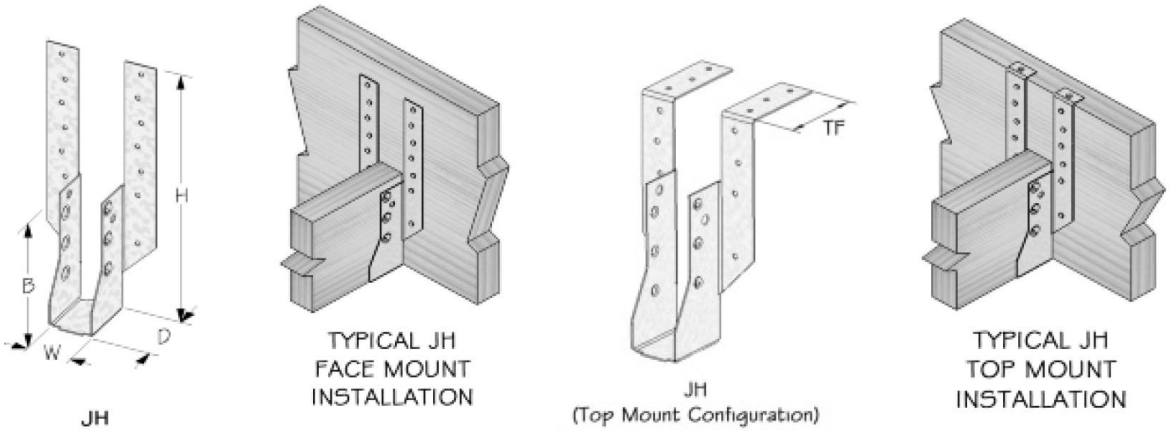

FIGURE 8—DIMENSIONS AND INSTALLATION OF JH JOIST HANGER

TABLE 9—JPF PURLIN HANGER ALLOWABLE LOADS[1,2,3,4]

STOCK NO.	STEEL GAGE	DIMENSIONS (in.)				MEMBER SIZE	FASTENER SCHEDULE					ALLOWABLE LOADS (lbs.)			
							Header			Joist[5]		Download			Uplift
		W	H	D	TF		Top	Face	Type	Qty	Type	C_D=1.0	C_D=1.15	C_D=1.25	C_D=1.6
JPF24	20	$1^9/_{16}$	$3^3/_8$	$1^1/_2$	$1^1/_{16}$	2 x 4	2	0	10d Common	2	10d Common	1,035	1,035	1,035	315
							2	2	10d Common	2	10d Common	1,305	1,305	1,305	425
JPF26	20	$1^9/_{16}$	$5^3/_8$	$1^1/_2$	$1^1/_{16}$	2 x 6	2	0	10d Common	2	10d Common	1,035	1,035	1,035	315
							2	2	10d Common	2	10d Common	1,305	1,305	1,305	425

For **SI:** 1 inch = 25.4 mm, 1 lbf = 4.45 N.

[1]Allowable loads have been adjusted for load duration factors, C_D, as shown, in accordance with the NDS. The allowable loads do not apply to loads of other durations, and are not permitted to be adjusted for other load durations. See Sections 4.1 and 4.2 for additional design and installation requirements.
[2]See Section 3.25.3 for required fastener dimensions and mechanical properties.
[3]Allowable loads shown are for installations in wood members complying with Section 3.25.2. Wood members must also have a reference compression perpendicular to grain design value, $F_{c\text{-}perp}$, of 625 psi (4.31 MPa) or greater.
[4]JPF hangers provide torsional resistance, where torsional resistance is defined as a moment not less than 75 pounds (334 N) times the depth of the joist at which the lateral movement of the top or bottom of the joist with respect to the vertical position of the joist is 0.125 inch (3.2 mm).
[5]Joist nails must be driven horizontally into the joist at an angle of 30- to 45-degrees from normal, such that they penetrate through the joist, and into the header.

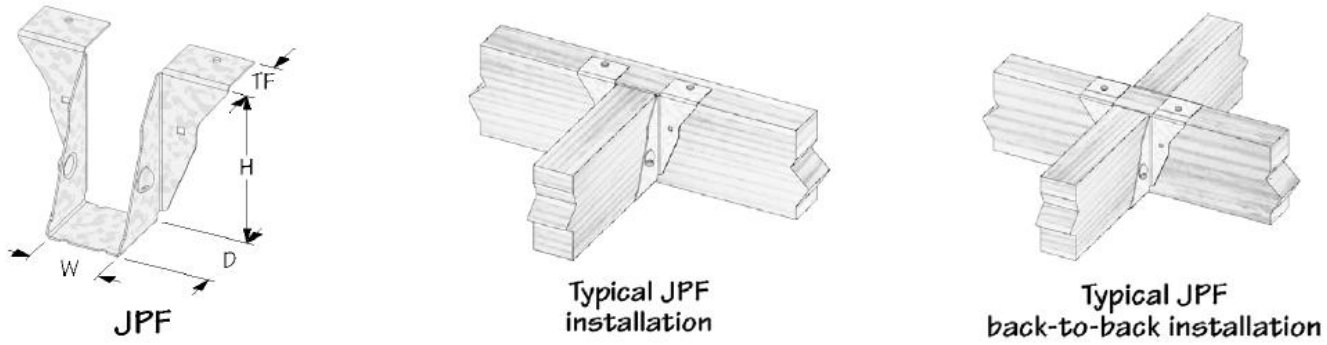

FIGURE 9—JPF PURLIN HANGER

TABLE 10—KEG, KMEG and KLEG GLULAM BEAM HANGER ALLOWABLE LOADS[1,2,3]

STOCK NO.	STEEL GAGE		DIMENSIONS[4] (in.)					BOLT SCHEDULE			ALLOWABLE LOADS (lbs.)						
	Top Flange	U-Strap	W	H[5]	D	TF	L	Hdr Qty	Joist Qty	Bolt Dia. (in.)	With Top Flange			Without Top Flange			Uplift
											C_D = 1.0	C_D = 1.15	C_D = 1.25	C_D = 1.0	C_D = 1.15	C_D = 1.25	C_D = 1.6
KLEG3	7	7	3 1/4	Specify	6	2 1/2	12	4	2	3/4	11,980	12,165	12,165	3,580	4,115	4,470	3,845
KLEG5	7	7	5 1/4	Specify	6	2 1/2	12	4	2	3/4	11,980	12,165	12,165	3,580	4,115	4,470	4,690
KLEG7	7	7	6 7/8	Specify	6	2 1/2	12	4	2	3/4	11,980	12,165	12,165	3,580	4,115	4,470	4,690
KMEG5	7	7	5 1/4	Specify	6	2 1/2	12	6	2	3/4	12,635	12,635	12,635	5,345	6,150	6,685	4,690
KMEG7	7	7	6 7/8	Specify	6	2 1/2	12	6	2	3/4	12,635	12,635	12,635	5,345	6,150	6,685	4,690
KEG5	3	7	5 1/4	Specify	6	2 1/2	12	8	2	1	17,615	18,995	19,920	9,215	10,595	11,520	7,305
KEG7	3	7	6 7/8	Specify	6	2 1/2	13 1/2	8	2	1	18,695	20,080	21,005	9,245	10,630	11,555	9,275
KEG9	3	7	8 7/8	Specify	6	2 1/2	15 1/2	8	2	1	20,125	21,145	21,145	9,275	10,665	11,595	9,305
KEG11	3	7	10 7/8	Specify	6	2 1/2	17 1/2	8	2	1	21,145	21,145	21,145	9,295	10,690	11,620	9,325

For **SI:** 1 inch = 25.4 mm, 1 lbf = 4.45 N.

[1]Allowable loads have been adjusted for load duration factors, C_D, as shown, in accordance with the NDS. The allowable loads do not apply to loads of other durations, and are not permitted to be adjusted for other load durations. See Sections 4.1 and 4.2 for additional design and installation requirements.
[2]See Section 3.25.3 for required fastener dimensions and mechanical properties.
[3]Allowable loads shown are for installations in wood members complying with Section 3.25.2. Wood members must also have a reference perpendicular to grain design value, $F_{c\text{-}perp}$, of 560 psi (3.17 MPa) or greater. Header members must have a minimum dimension of 5.5 inches (140 mm) in the direction parallel to the bolt axis.
[4]The hanger height dimension must be specified by the design professional, and must be 12 inches (305 mm) or greater.
[5]The header member height must be no less than 10 inches (254 mm) for KLEG, 13 inches (330 mm) for KMEG, and 20 inches (508 mm) for KEG hangers.

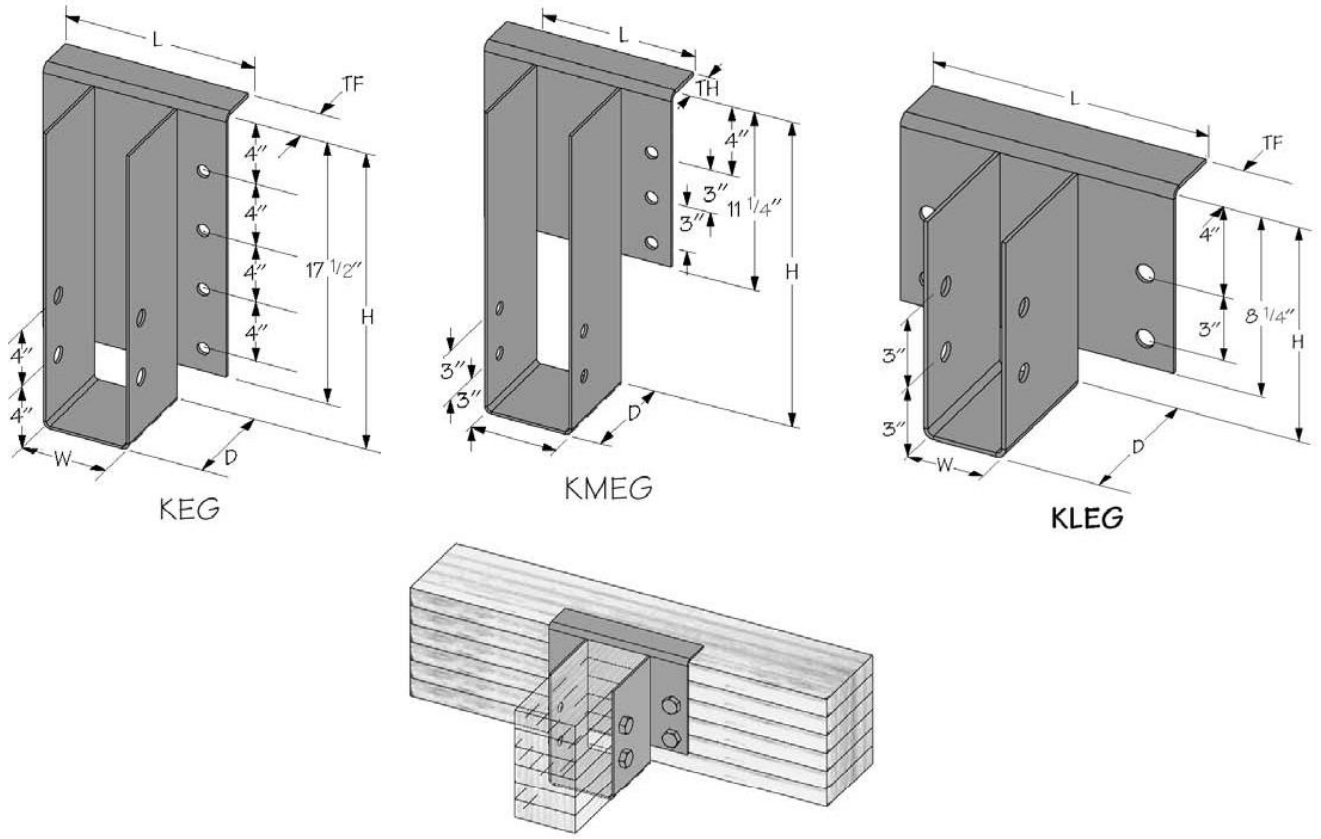

FIGURE 10—KEG, KMEG, & KLEG GLULAM BEAM HANGERS

TABLE 11—KEGQ TOP MOUNT GLULAM GIRDER HANGER ALLOWABLE LOADS[1,2,3]

STOCK NO.	STEEL GAGE		DIMENSIONS					FASTENER SCHEDULE				ALLOWABLE LOAD			
	Top	U-strap	W	H	D	TF_L	TF_D	Header		Joist		Download			Uplift
			(in.)					Qty	Type	Qty	Type	C_D = 1.0	C_D = 1.15	C_D = 1.25	C_D = 1.60
KEGQ3	3	7	$3^1/_4$	Spec.	6	18	3	28	WS3	12	WS3	17,265	17,265	17,265	4,695
KEGQ5	3	7	$5^1/_2$	Spec.	6	18	3	28	WS3	12	WS3	17,265	17,265	17,265	7,430
KEGQ7	3	7	$7^1/_4$	Spec.	6	18	3	28	WS3	12	WS3	17,265	17,265	17,265	7,430

For **SI:** 1 inch = 25.4 mm, 1 lbf = 4.45 N, 1 psi = 6.895 kPa.

[1]Allowable loads have been adjusted for load duration factors, C_D, as shown, in accordance with the NDS. The allowable loads do not apply to loads of other durations, and are not permitted to be adjusted for other load durations. See Sections 4.1 and 4.2 for additional design and installation requirements.
[2]See ESR-2761 for required fastener dimensions and mechanical properties.
[3]Allowable loads shown are for installations in wood members complying with Section 3.25.2. Wood members must also have a minimum reference compression perpendicular to grain design value, $F_{c\text{-}perp}$, of 625 psi (4.31 MPa) or greater.
[4]The hanger height dimension must be specified by the design professional, and must be 11 inches (279 mm) or greater.
[5]The header member height must be no less than 11 inches (279 mm) for KEGQ5 and 11 inches (279 mm) for KEGQ7 hangers.

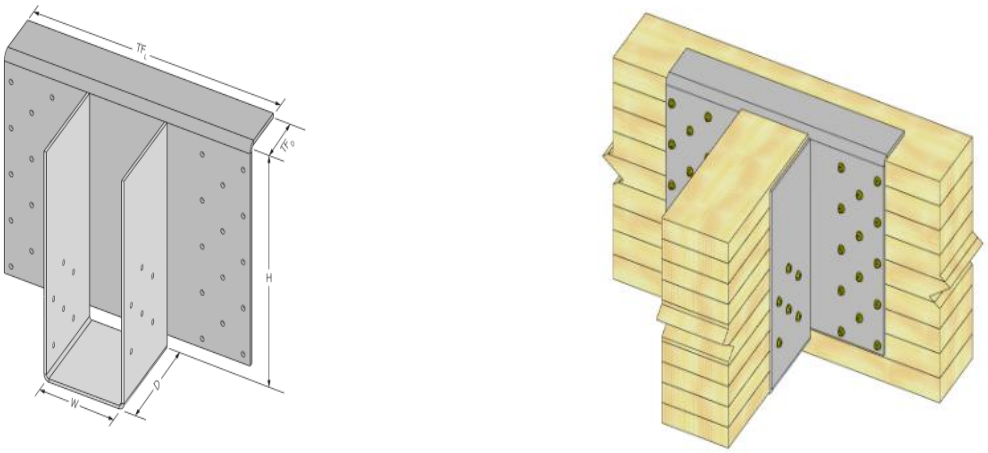

FIGURE 11—KEGQ TOP MOUNT GIRDER HANGER AND TYPICAL INSTALLATION DETAIL

TABLE 12—KF PANEL HANGER ALLOWABLE LOADS[1,2,3]

STOCK NO.	STEEL GA.	DIMENSIONS (in.)				FASTENER SCHEDULE				ALLOWABLE LOADS (lbs.)		
		W	H	D	TF	Header		Joist		Download		
						Qty	Type	Qty	Type	C_D = 1.0	C_D = 1.15	C_D = 1.25
KF44	18	$3^9/_{16}$	$3^3/_8$	1	$1^1/_8$	2	10d Common	1	10d x $1^1/_2$	695	695	695
KF46	18	$3^9/_{16}$	$5^3/_8$	1	$1^1/_8$	2	10d Common	1	10d x $1^1/_2$	810	810	810

For **SI:** 1 inch = 25.4 mm, 1 psi = 6.895 kPa.

[1]Allowable loads have been adjusted for load duration factors, C_D, as shown, in accordance with the NDS. The allowable loads do not apply to loads of other durations, and are not permitted to be adjusted for other load durations. See Sections 4.1 and 4.2 for design and installation requirements.
[2]See Section 3.25.3 for required fastener dimensions and mechanical properties.
[3]Allowable loads shown are for installations in wood members complying with Section 3.25.2. Wood members must also have a reference compression perpendicular to grain design value, $F_{c\text{-}perp}$, of 625 psi (4.31 MPa) or greater.

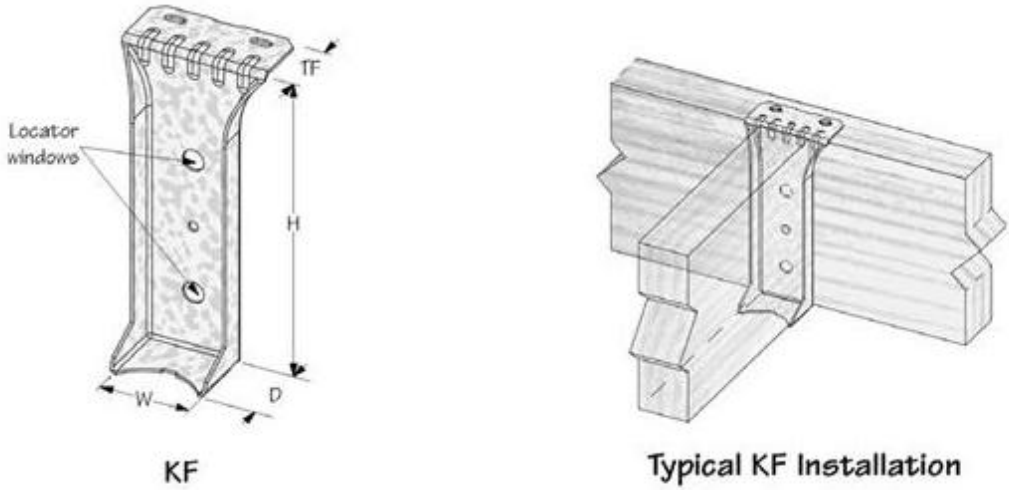

FIGURE 12—KF PANEL HANGER

TABLE 13—KGLS, KGLST, KHGLS and KHGLST GLULAM SADDLE HANGER ALLOWABLE LOADS[1,2,3]

STOCK NO.	JOIST SIZE & TYPE	STEEL GAGE		HANGER DIMENSIONS[4] (in.)					FASTENER SCHEDULE PER SIDE				BOLT SCHEDULE PER SIDE			
		Top Flange	Stirrup	W	H[5]	D	L	TF	Header		Joist		Header		Joist	
									Qty	Type	Qty	Type	Qty	Type	Qty	Type
KGLS35	3 1/8 Glulam	3	7	3 1/4	spec.	5	6	5 1/4	6	WS3	6	WS3	-		-	
KGLST35	3 1/8 Glulam	3	7	3 1/4	spec.	6 1/2	10	5 1/4	6	WS3	6	WS3	2	3/4	3	3/4
KGLS37	3 1/8 Glulam	3	7	3 1/4	spec.	5	6	6 7/8	6	WS3	6	WS3	-		-	
KGLST37	3 1/8 Glulam	3	7	3 1/4	spec.	6 1/2	10	6 7/8	6	WS3	6	WS3	2	3/4	3	3/4
KGLS39	3 1/8 Glulam	3	7	3 1/4	spec.	5	6	8 7/8	6	WS3	6	WS3	-		-	
KGLST39	3 1/8 Glulam	3	7	3 1/4	spec.	6 1/2	10	8 7/8	6	WS3	6	WS3	2	3/4	3	3/4
KGLS55	5 1/8 Glulam	3	7	5 1/4	spec.	5	9	5 1/4	6	WS3	6	WS3	-		-	
KGLST55	5 1/8 Glulam	3	7	5 1/4	spec.	6 1/2	12	5 1/4	6	WS3	6	WS3	2	3/4	3	3/4
KGLS57	5 1/8 Glulam	3	7	5 1/4	spec.	5	9	6 7/8	6	WS3	6	WS3	-		-	
KGLST57	5 1/8 Glulam	3	7	5 1/4	spec.	6 1/2	12	6 7/8	6	WS3	6	WS3	2	3/4	3	3/4
KGLS77	6 3/4 Glulam	3	7	6 7/8	spec.	5	12	6 7/8	6	WS3	6	WS3	-		-	
KGLST77	6 3/4 Glulam	3	7	6 7/8	spec.	6 1/2	12	6 7/8	6	WS3	6	WS3	2	3/4	3	3/4
KGLS79	6 3/4 Glulam	3	7	6 7/8	spec.	5	12	8 7/8	6	WS3	6	WS3	-		-	
KGLST79	6 3/4 Glulam	3	7	6 7/8	spec.	6 1/2	12	8 7/8	6	WS3	6	WS3	2	3/4	3	3/4
KHGLS5	5 1/8 Glulam	3	7	5 1/4	spec.	6 1/2	12	spec.	14	WS3	8	WS3	-		-	
KHGLST5	5 1/8 Glulam	3	7	5 1/4	spec.	6	12	spec.	14	WS3	8	WS3	2	3/4	3	3/4
KHGLS7	6 3/4 Glulam	3	7	6 7/8	spec.	6	12	spec.	14	WS3	8	WS3	-		-	
KHGLST7	6 3/4 Glulam	3	7	6 7/8	spec.	6 1/2	14	spec.	14	WS3	8	WS3	2	3/4	3	3/4
KHGLS9	8 3/4 Glulam	3	7	8 7/8	spec.	6	12	spec.	14	WS3	8	WS3	-		-	
KHGLST9	8 3/4 Glulam	3	7	8 7/8	spec.	6 1/2	16	spec.	14	WS3	8	WS3	2	3/4	3	3/4

STOCK NO.	JOIST SIZE & TYPE	ALLOWABLE LOADS (lbs.)			
		Download			Tension
		C_D = 1.0	C_D = 1.15	C_D = 1.25	C_D = 1.60
KGLS35	3 1/8 Glulam	11,070	11,420	11,650	-
KGLST35	3 1/8 Glulam	13,695	14,045	14,275	15,310
KGLS37	3 1/8 Glulam	11,070	11,420	11,650	-
KGLST37	3 1/8 Glulam	13,695	14,045	14,275	15,310
KGLS39	3 1/8 Glulam	11,070	11,420	11,650	-
KGLST39	3 1/8 Glulam	13,695	14,045	14,275	15,310
KGLS55	5 1/8 Glulam	15,655	16,065	16,340	-
KGLST55	5 1/8 Glulam	19,960	20,370	20,645	15,310
KGLS57	5 1/8 Glulam	16,670	17,020	17,250	-
KGLST57	5 1/8 Glulam	20,975	21,325	21,555	15,310
KGLS77	6 3/4 Glulam	21,220	21,570	21,800	-
KGLST77	6 3/4 Glulam	25,420	25,830	26,105	15,310
KGLS79	6 3/4 Glulam	21,220	21,570	21,800	-
KGLST79	6 3/4 Glulam	26,890	27,240	27,470	15,310
KHGLS5	5 1/8 Glulam	21,750	22,215	22,525	-
KHGLST5	5 1/8 Glulam	20,315	20,780	21,090	15,310
KHGLS7	6 3/4 Glulam	23,195	24,155	24,795	-
KHGLST7	6 3/4 Glulam	25,995	26,955	27,595	15,310
KHGLS9	8 3/4 Glulam	23,195	24,155	24,795	-
KHGLST9	8 3/4 Glulam	28,795	29,755	30,395	15,310

For **SI:** 1 inch = 25.4 mm, 1 lbf = 4.45 N.

[1]Allowable loads have been adjusted for load duration factors, C_D, as shown, in accordance with the NDS. The allowable loads do not apply to loads of other durations, and are not permitted to be adjusted for other load durations. See Sections 4.1 and 4.2 for design and installation requirements.

Table 13 Notes (continued)

[2]See ESR-2761 for required fastener dimensions and mechanical properties.
[3]Allowable loads shown are for installations in wood members complying with Section 3.25.2. Wood members must also have a reference compression perpendicular to grain design value, $F_{c\text{-}perp}$, of 560 psi (3.86 MPa) or greater.
[4]The hanger height dimension must be specified by the design professional, and must be 12 inches (305 mm) or greater.
[5]The header member height must be no less than 8.5 inches (216 mm) for KGLS, 9 inches (229 mm) for KGLST, 10.5 inches (267 mm) for KHGLS and 12 inches (305 mm) for KHGLST hangers.

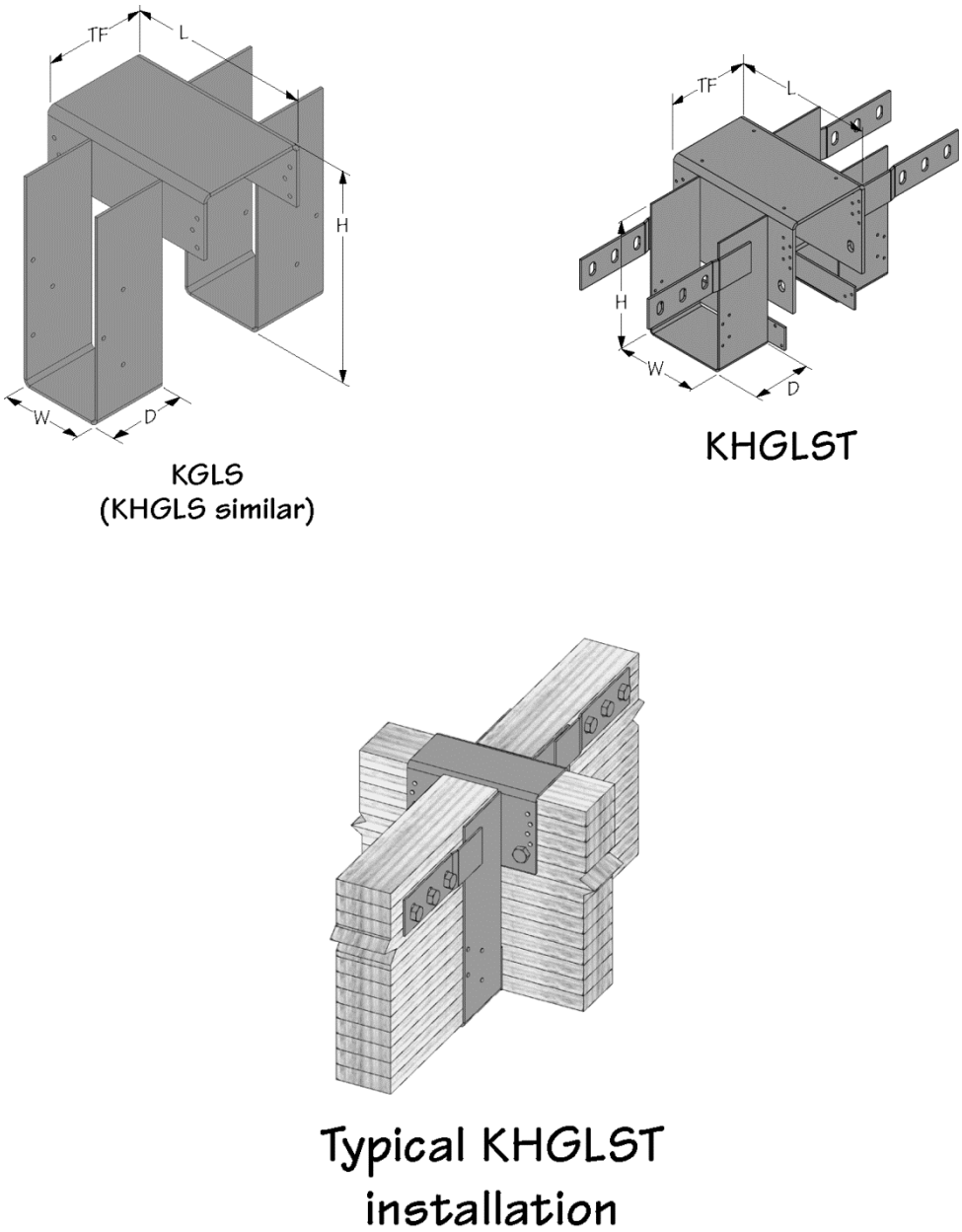

FIGURE 13—KGLS, KGLST, KHGLS & KHGLST GLULAM SADDLE HANGERS

TABLE 14—KGLT and KHGLT GLULAM HANGER ALLOWABLE LOADS[1,2,3]

STOCK NO.	STEEL GAGE		DIMENSIONS (in.)				FASTENER SCHEDULE			
	Top Flange	U-Strap	W	H[4]	D	L	Header		Joist	Screw
							Top	Face	Qty	Type
KGLT3	3	7	$3^1/_4$	Spec.	5	10	4	6	8	WS3
KGLT4	3	7	$3^5/_8$	Spec.	5	10	4	6	8	WS3
KGLT5	3	7	$5^1/_4$	Spec.	5	10	4	6	8	WS3
KGLT6	3	7	$5^5/_8$	Spec.	5	10	4	6	8	WS3
KGLT7	3	7	$6^7/_8$	Spec.	5	10	4	6	8	WS3
KGLT9	3	7	$8^7/_8$	Spec.	5	10	4	6	8	WS3
KHGLT3	3	7	$3^1/_4$	Spec.	6	12	6	12	6	WS3
KHGLT4	3	7	$3^5/_8$	Spec.	6	12	6	12	6	WS3
KHGLT5	3	7	$5^1/_4$	Spec.	6	12	6	12	6	WS3
KHGLT6	3	7	$5^5/_8$	Spec.	6	12	6	12	6	WS3
KHGLT7	3	7	$6^7/_8$	Spec.	6	12	6	12	6	WS3
KHGLT9	3	7	$8^7/_8$	Spec.	6	14	6	12	6	WS3
KHGLT11	3	7	$10^7/_8$	Spec.	6	16	6	12	6	WS3

STOCK NO.	ALLOWABLE LOADS (lbs.)						
	$F_{C\text{-}perp}$ = 460 psi			$F_{C\text{-}perp}$ = 625 psi			Uplift
	C_D = 1.0	C_D = 1.15	C_D = 1.25	C_D = 1.0	C_D = 1.15	C_D = 1.25	C_D = 1.6
KGLT3	8,490	8,900	9,175	10,555	10,965	11,055	1,935
KGLT4	8,490	8,900	9,175	10,555	10,965	11,055	1,935
KGLT5	8,490	8,900	9,175	10,555	10,965	11,055	1,935
KGLT6	8,490	8,900	9,175	10,555	10,965	11,055	1,935
KGLT7	8,490	8,900	9,175	10,555	10,965	11,055	1,935
KGLT9	8,490	8,900	9,175	10,555	10,965	11,055	1,935
KHGLT3	10,945	11,295	11,525	12,495	12,495	12,495	1,935
KHGLT4	11,980	12,330	12,495	12,495	12,495	12,495	1,935
KHGLT5	12,380	12,495	12,495	12,495	12,495	12,495	1,935
KHGLT6	12,380	12,495	12,495	12,495	12,495	12,495	1,935
KHGLT7	12,380	12,495	12,495	12,495	12,495	12,495	1,935
KHGLT9	12,380	12,495	12,495	12,495	12,495	12,495	1,935
KHGLT11	12,495	12,495	12,495	12,495	12,495	12,495	1,935

For **SI:** 1 inch = 25.4 mm, 1 lbf = 4.45 N, 1 psi = 6.895 kPa.

[1]Allowable loads have been adjusted for load duration factors, C_D, as shown, in accordance with the NDS. The allowable loads do not apply to loads of other durations, and are not permitted to be adjusted for other load durations. See Sections 4.1 and 4.2 for additional design and installation requirements.
[2]See ESR-2761 for required fastener dimensions and mechanical properties.
[3]Allowable loads shown are for installations in wood members complying with Section 3.25.2. Wood members must also have a minimum adjusted compression perpendicular to grain design value, $F_{c\text{-}perp}$, of either 460 psi (3.17 MPa) or 625 psi (4.31 MPa), as indicated in the table.
[4]The hanger height dimension must be specified by the design professional, and must be 7.5 inches (191 mm) or greater.

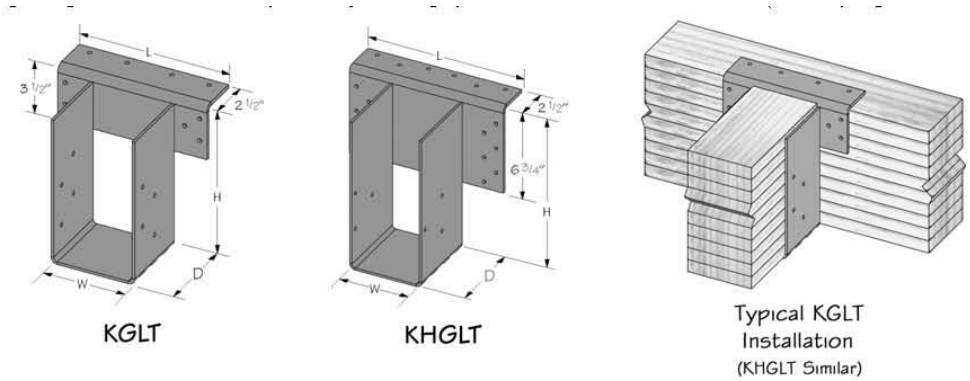

FIGURE 14—KGLT & KHGLT GLULAM HANGERS

TABLE 15—KHC HINGE CONNECTOR AND KHCST SEISMIC STRAP ALLOWABLE LOADS[1,2,3,4]

STOCK NO.	WOOD MEMBERS		STEEL THICKNESS		DIMENSIONS (inches)				FASTENER SCHEDULE		MINIMUM HEIGHT[5,6] (in)		ALLOWABLE LOADS (lbs)	
	Beam Type	Beam Size (in)	Sides Gage	T (in.)	W	PD	PT	H	Qty	Bolt Dia.	2 Bolt	3 Bolt	$F_{C\text{-}perp}$ = 410 psi	$F_{C\text{-}perp}$ = 560 psi
KHC55	Glulam	$5^1/_8$	7	$^3/_4$	$5^1/_4$	5	$^3/_4$	Spec.	Spec.	$^3/_4$	$17^1/_2$	14	10,505	14,350
KHC56	Glulam	$5^1/_8$	7	$^3/_4$	$5^1/_4$	6	$^3/_4$	Spec.	Spec.	$^3/_4$	$22^3/_4$	$17^1/_2$	12,610	17,220
KHC57	Glulam	$5^1/_8$	7	$^3/_4$	$5^1/_4$	7	$^3/_4$	Spec.	Spec.	$^3/_4$	$28^3/_4$	$21^3/_4$	14,710	20,090
KHC59	Glulam	$5^1/_8$	7	$^3/_4$	$5^1/_4$	9	$^3/_4$	Spec.	Spec.	$^3/_4$	$43^1/_2$	32	18,910	25,830
KHC75	Glulam	$6^3/_4$	7	1	$6^7/_8$	5	1	Spec.	Spec.	$^3/_4$	$20^3/_4$	16	13,840	18,900
KHC76	Glulam	$6^3/_4$	7	1	$6^7/_8$	6	1	Spec.	Spec.	$^3/_4$	$27^1/_2$	$20^3/_4$	16,605	22,680
KHC77	Glulam	$6^3/_4$	7	1	$6^7/_8$	7	1	Spec.	Spec.	$^3/_4$	$35^1/_2$	$26^1/_4$	19,375	26,460
KHC79	Glulam	$6^3/_4$	7	1	$6^7/_8$	9	1	Spec.	Spec.	$^3/_4$	55	40	24,910	34,020
KHC95	Glulam	$8^3/_4$	7	$1^1/_4$	$8^7/_8$	5	$1^1/_4$	Spec.	Spec.	$^3/_4$	$24^3/_4$	$18^3/_4$	17,940	24,500
KHC96	Glulam	$8^3/_4$	7	$1^1/_4$	$8^7/_8$	6	$1^1/_4$	Spec.	Spec.	$^3/_4$	$33^1/_2$	$24^3/_4$	21,525	29,400
KHC97	Glulam	$8^3/_4$	7	$1^1/_4$	$8^7/_8$	7	$1^1/_4$	Spec.	Spec.	$^3/_4$	$43^3/_4$	32	25,115	34,300
KHC99	Glulam	$8^3/_4$	7	$1^1/_4$	$8^7/_8$	9	$1^1/_4$	Spec.	Spec.	$^3/_4$	$69^1/_4$	$49^3/_4$	32,290	44,100
KHC115	Glulam	$10^3/_4$	3	$1^1/_2$	$10^7/_8$	5	$1^1/_2$	Spec.	Spec.	$^3/_4$	$27^1/_4$	$20^1/_4$	22,040	30,100
KHC116	Glulam	$10^3/_4$	3	$1^1/_2$	$10^7/_8$	6	$1^1/_2$	Spec.	Spec.	$^3/_4$	$37^1/_4$	27	26,445	36,120
KHC117	Glulam	$10^3/_4$	3	$1^1/_2$	$10^7/_8$	7	$1^1/_2$	Spec.	Spec.	$^3/_4$	$49^1/_4$	$35^1/_4$	30,855	42,140
KHC119	Glulam	$10^3/_4$	3	$1^1/_2$	$10^7/_8$	9	$1^1/_2$	Spec.	Spec.	$^3/_4$	$78^1/_4$	$55^1/_4$	39,670	54,180

STOCK NO.	DIMENSIONS (inches)			FASTENER SCHEDULE		ALLOWABLE F1 LOAD[7,8] (lbs)
	Steel Gage	W	L	Qty	Bolt Dia.	C_D = 1.6
KHCST2	7	$3^1/_2$	$25^5/_8$	4	$^3/_4$	10,075
KHCST3	7	$3^1/_2$	$31^5/_8$	6	$^3/_4$	14,685
KHCST4	3	$3^1/_2$	$37^5/_8$	8	$^3/_4$	20,145
KHCSTR2	7	$3^1/_2$	$25^5/_8$	4	$^3/_4$	10,075
KHCSTR3	7	$3^1/_2$	$31^5/_8$	6	$^3/_4$	14,685
KHCSTR4	3	$3^1/_2$	$37^5/_8$	8	$^3/_4$	20,145

For **SI**: 1 inch = 25.4 mm, 1 lbf = 4.45 N, 1 psi = 5.89 kPa.

[1]Allowable download loads correspond to a load duration, C_D, of 1.0. No further increases for duration of load permitted, Allowable F1 loads have been adjusted for a load duration factor of 1.6, corresponding to a ten-minute load duration (i.e., wind or earthquake loading) in accordance with the NDS. The allowable F1 loads do not apply to loads of other durations. See Sections 4.1 and 4.2 for design and installation requirements.
[2]See Section 3.25.3 for required fastener dimensions and mechanical properties.
[3]Allowable loads shown are for installations in wood members complying with Section 3.25.2. Wood members must also have a reference compression perpendicular to grain design value, $F_{c\text{-}perp}$, of 410 psi (2.83 MPa) or 560 psi (3.86 MPa), as indicated in the table above.
[4]KHCST and KHCSTR seismic straps must be used in conjunction with the KHC devise whenever the design loads include a horizontal tension load in the F1 direction.
[5]Specify 2 or 3 bolt rotation tab. The minimum height depends on the rotation tab specified.
[6]Minimum heights correspond to loads shown. Allowable loads must be reduced in direct proportion for lesser heights.
[7]Allowable F1 (tension) loads for the KHCST and KHCSTR apply for installations on beams with a minimum width of 5.125 inches (130 mm).
[8]KHCST and KHCSTR seismic straps must be used in pairs, with one strap on each side of the beam, such that the bolts are loaded in double shear. Allowable F1 loads apply to one pair of seismic straps.

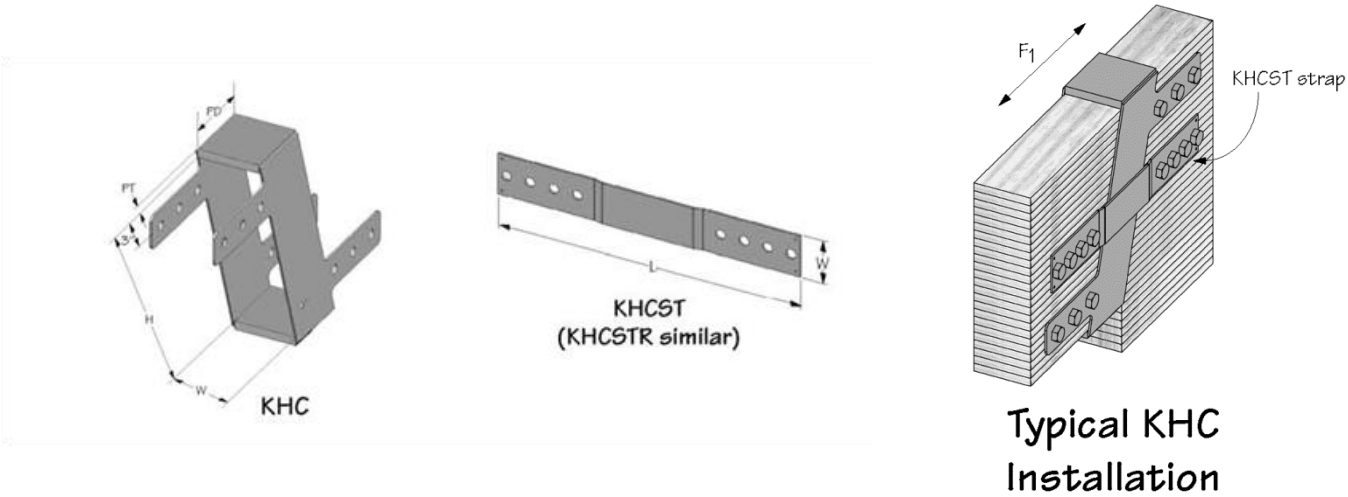

FIGURE 15—KHC HINGE CONNECTOR & KHCST SEISMIC STRAP

TABLE 16—KLB, KB, KHHB, KGB, AND KHGB TOP MOUNT HANGER ALLOWABLE LOADS[1,2,3,4,5]

STOCK NO.	STEEL GA.	DIMENSIONS (in.)				FASTENER SCHEDULE					ALLOWABLE LOADS (lbs.)			
		W	H	D	TF	Header			Joist		Download			Uplift
						Top	Face	Type	Qty	Type	C_D = 1.0	C_D = 1.15	C_D = 1.25	C_D = 1.60
KLB26	14	$1^9/_{16}$	$5^3/_8$	$1^1/_2$	$1^3/_8$	2	4	16d Com.	2	10d x $^1/_2$	1,670	1,705	1,725	390
KLB28	14	$1^9/_{16}$	$7^1/_4$	$1^3/_4$	$1^3/_8$	2	4	16d Com.	2	10d x $^1/_2$	1,905	1,935	1,960	390
KLB210	14	$1^9/_{16}$	$9^1/_4$	2	$1^3/_8$	2	4	16d Com.	2	10d x $^1/_2$	2,140	2,170	2,195	390
KLB212	14	$1^9/_{16}$	$11^1/_8$	2	$1^3/_8$	2	4	16d Com.	2	10d x $^1/_2$	2,140	2,170	2,195	390
KB38	12	$2^9/_{16}$	$7^1/_4$	2	$1^1/_2$	2	2	NA20D	2	10d x $^1/_2$	2,535	2,535	2,535	425
KB310	12	$2^9/_{16}$	$9^1/_4$	2	$1^1/_2$	2	2	NA20D	2	10d x $^1/_2$	2,535	2,535	2,535	425
KB312	12	$2^9/_{16}$	$11^1/_8$	$2^3/_8$	$2^1/_2$	2	2	NA20D	2	10d x $^1/_2$	2,535	2,535	2,535	425
KB314	12	$2^9/_{16}$	$13^1/_8$	$2^3/_8$	$2^1/_2$	2	2	NA20D	2	10d x $^1/_2$	2,535	2,535	2,535	425
KB316	12	$2^9/_{16}$	$15^1/_8$	$2^3/_8$	$2^1/_2$	2	2	NA20D	2	10d x $^1/_2$	2,535	2,535	2,535	425
KB48	12	$3^9/_{16}$	$7^1/_4$	2	$2^1/_2$	2	2	NA20D	2	10d x $^1/_2$	2,605	2,605	2,605	580
KB410	12	$3^9/_{16}$	$9^1/_4$	$2^3/_8$	$2^1/_2$	2	2	NA20D	2	NA20D	2,605	2,605	2,605	580
KB412	12	$3^9/_{16}$	$11^1/_8$	$2^3/_8$	$2^1/_2$	4	2	NA20D	2	NA20D	4,075	4,155	4,185	580
KB414	12	$3^9/_{16}$	$13^1/_8$	$2^3/_8$	$2^1/_2$	4	2	NA20D	2	NA20D	4,075	4,155	4,185	580
KB416	12	$3^9/_{16}$	$15^1/_8$	$2^3/_8$	$2^1/_2$	4	2	NA20D	2	NA20D	4,075	4,155	4,185	580
KB610	12	$5^1/_2$	$9^1/_4$	$2^3/_8$	$2^1/_2$	4	6	NA20D	2	NA20D	4,795	4,920	4,920	580
KB612	12	$5^1/_2$	$11^1/_8$	$2^3/_8$	$2^1/_2$	4	6	NA20D	2	NA20D	4,795	4,920	4,920	580
KB614	12	$5^1/_2$	$13^1/_8$	$2^3/_8$	$2^1/_2$	4	6	NA20D	2	NA20D	4,795	4,920	4,920	580
KB616	12	$5^1/_2$	$15^1/_8$	$2^3/_8$	$2^1/_2$	4	6	NA20D	2	NA20D	4,795	4,920	4,920	580
KHHB3	7	$3^1/_4$	Spec.	3	$2^1/_2$	4	6	WS3[6]	6	WS3[6]	6,480	6,480	6,480	2,215
KHHB5	7	$5^1/_4$	Spec.	3	$2^1/_2$	4	6	WS3[6]	6	WS3[6]	6,480	6,480	6,480	2,215
KHHB7	7	$6^7/_8$	Spec.	3	$2^1/_2$	4	6	WS3[6]	6	WS3[6]	6,480	6,480	6,480	2,215
KGB3	7	$3^1/_4$	Spec.	$3^1/_2$	$2^1/_2$	4	10	WS3[6]	6	WS3[6]	6,480	6,480	6,480	2,215
KGB5	7	$5^1/_4$	Spec.	$3^1/_2$	$2^1/_2$	4	10	WS3[6]	6	WS3[6]	6,480	6,480	6,480	2,215
KGB7	7	$6^7/_8$	Spec.	$3^1/_2$	$2^1/_2$	4	10	WS3[6]	6	WS3[6]	6,480	6,480	6,480	2,215
KHGB5	7	$5^1/_4$	Spec.	4	$2^1/_2$	4	12	WS3[6]	6	WS3[6]	6,480	6,480	6,480	2,215
KHGB7	7	$6^7/_8$	Spec.	4	$2^1/_2$	4	12	WS3[6]	6	WS3[6]	6,480	6,480	6,480	2,215

For **SI:** 1 inch = 25.4 mm, 1 lbf = 4.45 N.

[1]Allowable loads have been adjusted for load duration factors, C_D, as shown, in accordance with the NDS. The allowable loads do not apply to loads of other durations, and are not permitted to be adjusted for other load durations. See Sections 4.1 and 4.2 for design and installation requirements.
[2]See Section 3.25.3 for required fastener dimensions and mechanical properties.
[3]Allowable loads shown are for installations in wood members complying with Section 3.25.2. Wood members must also have a reference compression perpendicular to grain design value, $F_{c\text{-}perp}$, of 625 psi (4.31 MPa) or greater.
[4]The hanger height dimension for KHHB, KGB and KHGB hangers must be specified by the design professional, and must be a minimum of 8 inches (203 mm) for KHHB, 9 inches (229 mm) for KGB and 11 inches (279 mm) KHGB hangers.
[5]The header member height must be no less than 8 inches (203 mm) for KHHB, 9 inches (229 mm) for KGB, and 11 inches (279 mm) for KHGB hangers.
[6]Refer to ESR-2761 for required fastener dimensions and mechanical properties

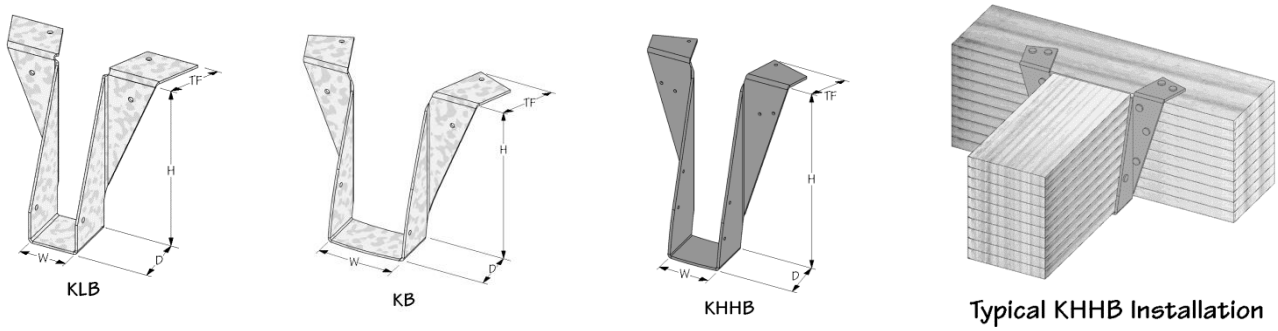

FIGURE 16—KLB, KB, KHHB, KGB, AND KHGB TOP MOUNT HANGERS

TABLE 17—MSH STRAP HANGER ALLOWABLE LOADS[1,2,3]

STOCK NO.	STEEL GAGE	DIMENSIONS (in.)				MOUNTING CONDITION[4]	FASTENERS					ALLOWABLE LOADS (lbs.)			
							Header			Joist		Download			Uplift
		W	D	H	B		Top Qty	Face Qty	Type	Qty	Type	C_D=1.0	C_D=1.15	C_D=1.25	C_D=1.6
MSH29[5]	18	$1^5/_8$	$2^1/_4$	$8^3/_4$	5	Face-Max	-	18	10d Com.	4	10d Com.	2,550	2,640	2,640	715
						Top-Max	4	6	10d Com.	4	10d Com.	2,945	2,945	2,945	715
						Top-Min	4	2	10d Com.	4	10d x $1^1/_2$	2,390	2,390	2,390	-
MSH213[5]	18	$1^5/_8$	$2^1/_4$	$12^3/_4$	5	Face-Max	-	20	10d Com.	4	10d Com.	2,640	2,640	2,640	715
						Top-Max	4	6	10d Com.	4	10d Com.	2,945	2,945	2,945	715
						Top-Min	4	2	10d Com.	4	10d x $1^1/_2$	2,390	2,390	2,390	-
MSH218[5]	18	$1^5/_8$	$2^1/_4$	$16^3/_4$	5	Face-Max	-	26	10d Com.	4	10d Com.	2,640	2,640	2,640	715
						Top-Max	4	6	10d Com.	4	10d Com.	2,945	2,945	2,945	715
						Top-Min	4	2	10d Com.	4	10d x $1^1/_2$	2,390	2,390	2,390	-
MSH222	18	$1^5/_8$	$1^3/_4$	23	$10^{13}/_{16}$	Face-Max	-	22	10d Com.	4	10d x $1^1/_2$	2,120	2,190	2,230	715
						Top-Max	4	6	10d Com.	4	10d x $1^1/_2$	2,120	2,190	2,230	715
						Top-Min	4	2	10d Com.	4	10d x $1^1/_2$	2,120	2,190	2,230	-
MSH179	18	$1^{13}/_{16}$	$2^1/_4$	$8^{11}/_{16}$	$4^{15}/_{16}$	Face-Max	-	18	10d Com	4	10d Com	2,550	2,640	2,640	715
						Top-Max	4	6	10d Com	4	10d Com	2,945	2,945	2,945	715
						Top-Min	4	2	10d Com	4	10d x $1^1/_2$	2,390	2,390	2,390	-
MSH1713	18	$1^{13}/_{16}$	$1^3/_4$	$14^7/_{16}$	$10^3/_4$	Face-Max	-	12	10d Com.	4	10d Com.	1,440	1,640	1,770	715
						Top-Max	4	6	10d Com.	4	10d Com.	2,395	2,460	2,505	715
						Top-Min	4	2	10d Com.	4	10d x $1^1/_2$	2,390	2,390	2,390	-
MSH1718	18	$1^{13}/_{16}$	$1^3/_4$	$16^5/_8$	$10^3/_4$	Face-Max	-	22	10d Com.	4	10d x $1^1/_2$	1,920	2,190	2,280	715
						Top-Max	4	6	10d Com.	4	10d x $1^1/_2$	2,395	2,460	2,505	715
						Top-Min	4	2	10d Com.	4	10d x $1^1/_2$	2,390	2,390	2,390	-
MSH1722	18	$1^{13}/_{16}$	$1^3/_4$	$22^7/_8$	$10^3/_4$	Face-Max	-	22	10d Com.	4	10d x $1^1/_2$	2,280	2,280	2,280	715
						Top-Max	4	6	10d Com.	4	10d x $1^1/_2$	2,395	2,460	2,505	715
						Top-Min	4	2	10d Com.	4	10d x $1^1/_2$	2,390	2,390	2,390	-
MSH2022	18	$2^1/_{16}$	$1^3/_4$	$22^5/_8$	$10^7/_{16}$	Face-Max	-	22	10d Com.	4	10d x $1^1/_2$	2,350	2,350	2,350	715
						Top-Max	4	6	10d Com.	4	10d x $1^1/_2$	2,670	2,735	2,780	715
						Top-Min	4	2	10d Com.	4	10d x $1^1/_2$	2,390	2,390	2,390	-
MSH2318	18	$2^3/_8$	$1^3/_4$	$18^1/_8$	$10^7/_{16}$	Face-Max	-	16	10d Com.	4	10d x $1^1/_2$	1,920	2,190	2,350	715
						Top-Max	4	6	10d Com.	4	10d x $1^1/_2$	3,010	3,075	3,120	715
						Top-Min	4	2	10d Com.	4	10d x $1^1/_2$	2,395	2,395	2,395	-
MSH2322	18	$2^3/_8$	$1^3/_4$	$22^5/_8$	$10^7/_{16}$	Face-Max	-	22	10d Com.	4	10d x $1^1/_2$	2,350	2,350	2,350	715
						Top-Max	4	6	10d Com.	4	10d x $1^1/_2$	3,010	3,075	3,120	715
						Top-Min	4	2	10d Com.	4	10d x $1^1/_2$	2,395	2,395	2,395	-
MSH318	18	$2^9/_{16}$	$1^3/_4$	18	$10^3/_8$	Face-Max	-	16	10d Com.	4	10d x $1^1/_2$	1,920	2,190	2,350	715
						Top-Max	4	6	10d Com.	4	10d x $1^1/_2$	3,240	3,240	3,240	715
						Top-Min	4	2	10d Com.	4	10d x $1^1/_2$	2,395	2,395	2,395	-
MSH322	18	$2^9/_{16}$	$1^3/_4$	$22^1/_2$	$10^3/_8$	Face-Max	-	22	10d Com.	4	10d x $1^1/_2$	2,350	2,350	2,350	715
						Top-Max	4	6	10d Com.	4	10d x $1^1/_2$	3,240	3,240	3,240	715
						Top-Min	4	2	10d Com.	4	10d x $1^1/_2$	2,395	2,395	2,395	-
MSH218-2	16	$3^1/_8$	$1^3/_4$	$17^3/_4$	$10^1/_{16}$	Face-Max	-	16	10d Com.	4	10d Com.	2,000	2,245	2,420	675
						Top-Max	4	6	10d Com.	4	10d Com.	3,485	3,575	3,640	675
						Top-Min	4	2	10d Com.	4	10d Com.	2,435	2,435	2,435	-
MSH222-2	16	$3^1/_8$	$1^3/_4$	$22^1/_4$	$10^1/_{16}$	Face-Max	-	22	10d Com.	4	10d Com.	2,750	3,085	3,330	675
						Top-Max	4	6	10d Com.	4	10d Com.	3,485	3,575	3,640	675
						Top-Min	4	2	10d Com.	4	10d Com.	2,435	2,435	2,435	-
MSH413[5]	16	$3^9/_{16}$	$1^3/_4$	14	$7^5/_8$	Face-Max	-	14	10d Com.	6	10d Com.	2,340	2,640	2,855	1,815
						Top-Max	4	6	10d Com.	6	10d Com.	3,875	3,875	3,875	1,815
						Top-Min	4	2	10d Com.	6	10d Com.	2,530	2,530	2,530	-
MSH418[5]	16	$3^9/_{16}$	$1^3/_4$	$17^1/_2$	$7^5/_8$	Face-Max	-	18	10d Com.	6	10d Com.	2,840	3,200	3,460	1,815
						Top-Max	4	6	10d Com.	6	10d Com.	3,875	3,875	3,875	1,815
						Top-Min	4	2	10d Com.	6	10d Com.	2,530	2,530	2,530	-
MSH422[5]	16	$3^9/_{16}$	$1^3/_4$	$21^1/_2$	$7^5/_8$	Face-Max	-	22	10d Com.	6	10d Com.	3,340	3,765	4,065	1,815
						Top-Max	4	6	10d Com.	6	10d Com.	3,525	3,705	3,830	1,815
						Top-Min	4	2	10d Com.	6	10d Com.	2,530	2,530	2,530	-

For **SI:** 1 inch = 25.4 mm, 1 lbf = 4.45 N, 1 psi = 6.895 kPa.

(See footnotes on following page)

TABLE 17—MSH STRAP HANGER ALLOWABLE LOADS (Continued)[1,2,3]

STOCK NO.	STEEL GAGE	DIMENSIONS (in.)				MOUNTING CONDITION[4]	FASTENERS					ALLOWABLE LOADS (lbs.)			
							Header			Joist		Download			Uplift
		W	D	H	B		Top Qty	Face Qty	Type	Qty	Type	C_D=1.0	C_D=1.15	C_D=1.25	C_D=1.6
MSH422IF	16	3 5/8	1 3/4	22	9 13/16	Face-Max	-	22	10d Com.	4	10d Com.	2,750	3,085	3,330	675
						Top-Max	4	6	10d Com.	4	10d Com.	3,485	3,575	3,640	675
						Top-Min	4	2	10d Com.	4	10d Com.	2,530	2,530	2,530	-
MSH424[5]	16	3 5/8	2	21 1/2	5 3/16	Face-Max	-	36	10d Com.	6	10d Com.	5,090	5,725	5,975	1,815
						Top-Max	4	6	10d Com.	6	10d Com.	3,875	3,875	3,875	1,815
						Top-Min	4	2	10d Com.	6	10d Com.	2,530	2,530	2,530	-
MSH422-2	14	7 1/4	2	22 1/8	11	Face-Max	-	26	16d Com.	6	16d Com.	4,005	4,515	4,845	1,380
						Top-Max	4	10	16d Com.	6	16d Com.	4,665	4,860	4,990	1,380
						Top-Min	4	4	16d Com.	6	16d Com.	3,740	3,820	3,870	-
MSH422-2IF	14	7 1/4	2	22 1/8	11	Face-Max	-	26	16d Com.	6	16d Com.	4,005	4,515	4,845	1,380
						Top-Max	4	10	16d Com.	6	16d Com.	4,665	4,860	4,990	1,380
						Top-Min	4	4	16d Com.	6	16d Com.	3,740	3,820	3,870	-
MSH426[5]	14	3 5/8	1 3/4	26	8	Face-Max	-	38	16d Com.	6	16d Com.	5,455	5,675	5,825	1,815
						Top-Max	4	8	16d Com.	6	16d Com.	3,760	3,760	3,760	1,795
						Top-Min	4	2	16d Com.	6	16d Com.	2,435	2,435	2,435	-
MSH426IF[5]	14	3 5/8	1 3/4	26	8	Face-Max	-	38	16d Com.	6	16d Com.	5,455	5,675	5,825	1,815
						Top-Max	4	8	16d Com.	6	16d Com.	3,760	3,760	3,760	1,795
						Top-Min	4	2	16d Com.	6	16d Com.	2,435	2,435	2,435	-
MSH426-2	14	7 1/4	2	26 1/16	11	Face-Max	-	26	16d Com.	6	16d Com.	4,005	4,515	4,845	1,380
						Top-Max	4	10	16d Com.	6	16d Com.	4,665	4,860	4,990	1,380
						Top-Min	4	4	16d Com.	6	16d Com.	3,740	3,820	3,870	-
MSH2322-2	16	4 3/4	1 3/4	22	9 1/4	Face-Max	-	46	10d Com.	4	10d Com.	5,560	5,620	5,665	675
						Top-Max	4	6	10d Com.	4	10d Com.	3,485	3,575	3,640	675
						Top-Min	4	2	10d Com.	4	10d Com.	2,530	2,530	2,530	-
MSH2622-2	16	5 3/8	1 3/4	22	9 1/4	Face-Max	-	46	10d Com.	4	10d Com.	5,560	5,620	5,665	675
						Top-Max	4	6	10d Com.	4	10d Com.	3,485	3,575	3,640	675
						Top-Min	4	2	10d Com.	4	10d Com.	2,530	2,530	2,530	-

For **SI:** 1 inch = 25.4 mm, 1 lbf = 4.45 N, 1 psi = 6.895 kPa.

[1]Allowable loads have been adjusted for load duration factors, C_D, as shown, in accordance with the NDS. The allowable loads do not apply to loads of other durations, and are not permitted to be adjusted for other load durations. See Sections 4.1 and 4.2 for additional design and installation requirements.
[2]See Section 3.25.3 for required fastener dimensions and mechanical properties.
[3]Allowable loads shown are for installations in wood members complying with Section 3.25.2. Wood members must also have a minimum reference compression perpendicular to grain design value, $F_{c\text{-}perp}$, of 625 psi (4.31 MPa) or greater.
[4]See Figure 17 for installation details. Mounting conditions are as follows:
Face-Max – The specified number of header nails must be driven into the wide face of the header.
Top-Max – The hanger is installed in a top mount condition with at least six nail holes filled on the face of the header, and four nail holes filled on the top of the header. The straps must wrap over the top of the header at least 2.5 inches (63.5 mm).
Top-Min – The hanger is installed in a top mount condition with at least the top two nail holes filled on the face of the header, and four nail holes filled on the top of the header. The straps must wrap over the top of the supporting member at least 2.5 inches (63.5 mm).
Combination – Follow fastening directions above for the applicable mounting condition for each individual flange strap. The lesser of the two allowable loads applies.
[5]Joist nails must be driven horizontally into the joist at an angle of 30- to 45-degrees from normal, such that they penetrate through the joist, and into the header for the MSH29, MSH213, MSH218, MSH413, MSH418, MSH422, MSH424, MSH426 and MSH426IF models.

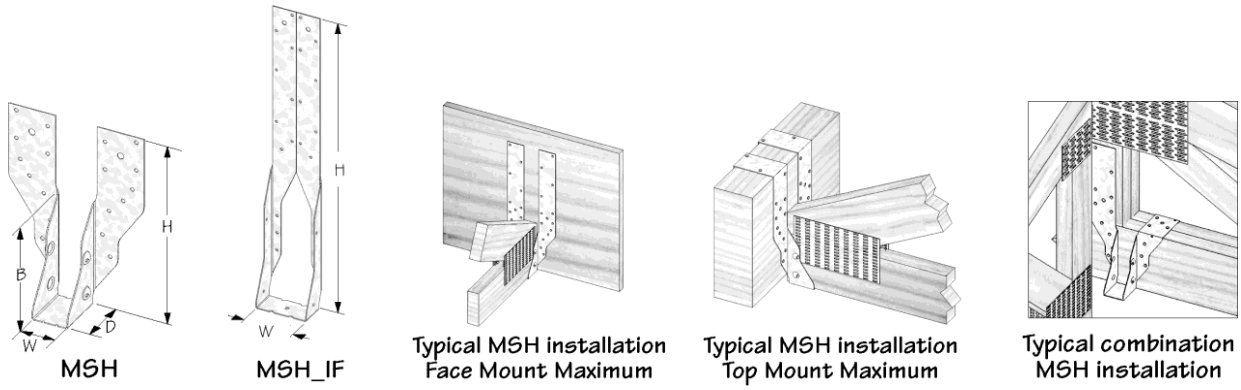

FIGURE 17—MSH STRAP HANGER

TABLE 18—PHG PANEL HANGER ALLOWABLE LOADS[1,2,3]

STOCK NO.	STEEL GAGE	DIMENSIONS (inches)				FASTENER SCHEDULE				ALLOWABLE LOADS (lbs)		
						Header		Joist		Download		
		W	H	D	TF	Qty	Type	Qty	Type	C_D = 1.0	C_D = 1.15	C_D = 1.25
PHG24	18	$1^9/_{16}$	$3^1/_2$	$1^3/_{16}$	$1^1/_{16}$	2	8d Common	--	--	580	580	580
PHG26	18	$1^9/_{16}$	$5^3/_8$	1	$1^1/_{16}$	2	10d Common	--	--	650	650	650
PHG34	18	$2^9/_{16}$	$3^1/_2$	1	$1^1/_8$	2	10d Common	--	--	650	650	650
PHG36	18	$2^9/_{16}$	$5^3/_8$	1	$1^1/_8$	2	10d Common	--	--	650	650	650
PHG24-2	18	$3^1/_8$	$3^1/_2$	1	$1^1/_8$	2	10d Common	--	--	650	650	650
PHG26-2	18	$3^1/_8$	$5^3/_8$	1	$1^1/_8$	2	10d Common	--	--	650	650	650

For **SI:** 1 inch = 25.4 mm, 1 lbf = 4.45 N, 1 psi = 6.895 kPa.

[1]Allowable downward loads correspond to a load duration, C_D, as shown in accordance with the NDS. The allowable loads do not apply to loads of other durations, and are not permitted to be adjusted for other load durations. See Sections 4.1 and 4.2 for design and installation requirements

[2]See Section 2.25.3 for required fastener dimensions and mechanical properties.

[3]Allowable loads shown are for installations in wood members complying with Section 3.25.2. Wood members must also have a reference compression perpendicular to grain design value, $F_{c\text{-}perp}$, of 625 psi (4.31 MPa) or greater.

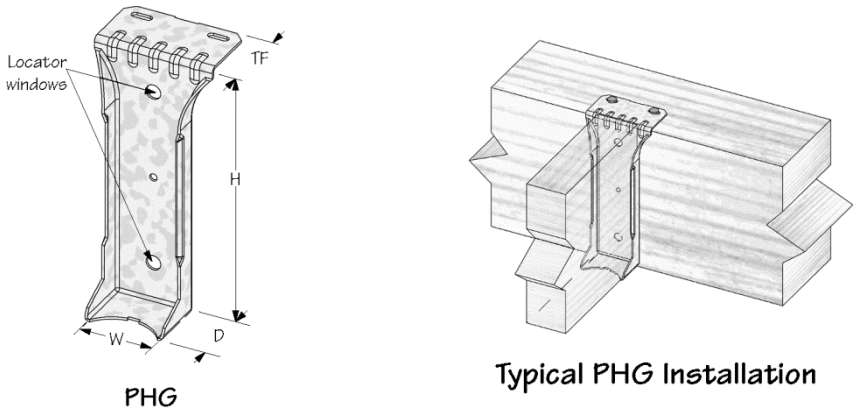

FIGURE 18—PANEL HANGER

TABLE 19—PHM TOP FLANGE HANGER ALLOWABLE LOADS[1,2,3,4]

STOCK NO.	STEEL GAGE		DIMENSIONS (in)					FASTENER SCHEDULE			
								Header		Joist	
	Top	Strap	W	H	D	L	TF	Qty	Type	Qty	Type
Installations in Laminated Veneer Lumber (LVL)											
PHM17xxx	7	10	$1^{13}/_{16}$	$9^{1}/_{4}$ - 30	$2^{1}/_{2}$	7	3	2	16d Common	2	10d x $1^{1}/_{2}$
PHM23xxx	7	10	$2^{3}/_{8}$	$9^{1}/_{4}$ - 30	$2^{1}/_{2}$	7	3	2	16d Common	2	10d x $1^{1}/_{2}$
PHM25xxx	7	10	$2^{9}/_{16}$	$9^{1}/_{4}$ - 30	$2^{1}/_{2}$	7	3	2	16d Common	2	10d x $1^{1}/_{2}$
PHM35xxx	7	10	$3^{5}/_{8}$	$9^{1}/_{4}$ - 32	$2^{1}/_{2}$	7	3	2	16d Common	2	10d Common
PHM23xxx-2	7	10	$4^{3}/_{4}$	$9^{1}/_{4}$ - 30	$2^{1}/_{2}$	7	3	2	16d Common	2	10d Common
PHM25xxx-2	7	10	$5^{1}/_{8}$	$9^{1}/_{4}$ - 30	$2^{1}/_{2}$	7	3	2	16d Common	2	10d Common
PHM35xxx-2	7	10	$7^{1}/_{8}$	$9^{1}/_{4}$ - 30	$2^{1}/_{2}$	10	3	2	16d Common	2	10d Common
PHM42xxx	7	10	$4^{3}/_{16}$	$9^{1}/_{2}$ - 30	$2^{1}/_{2}$	7	3	2	16d Common	2	10d Common
PHM55xxx	7	10	$5^{5}/_{8}$	$9^{1}/_{4}$ - 30	$2^{1}/_{2}$	7	3	2	16d Common	2	10d Common
Installations in Parallel Strand Lumber (PSL)											
PHM27xxx	7	10	$2^{3}/_{4}$	$9^{1}/_{4}$ - 30	$2^{1}/_{2}$	7	$2^{3}/_{4}$	2	16d Common	2	10d x $1^{1}/_{2}$
PHM35xxx	7	10	$3^{9}/_{16}$	$9^{1}/_{4}$ - 32	$2^{1}/_{2}$	7	3	2	16d Common	2	10d Common
PHM52xxx	7	10	$5^{3}/_{8}$	$9^{1}/_{4}$ - 30	$2^{1}/_{2}$	7	3	2	16d Common	2	10d Common
PHM55xxx	7	10	$5^{5}/_{8}$	$9^{1}/_{4}$ - 30	$2^{1}/_{2}$	7	3	2	16d Common	2	10d Common
PHM35xxx-2	7	10	$7^{1}/_{8}$	$9^{1}/_{4}$ - 30	$2^{1}/_{2}$	10	3	2	16d Common	2	10d Common

STOCK NO,	ALLOWABLE LOADS (lbs)								
	$F_{c\text{-}perp}$ = 460 psi			$F_{c\text{-}perp}$ = 625 psi			$F_{c\text{-}perp}$ = 750 psi		
	C_D=1.0	C_D=1.15	C_D=1.25	C_D=1.0	C_D=1.15	C_D=1.25	C_D=1.0	C_D=1.15	C_D=1.25
Installations in Laminated Veneer Lumber (LVL)									
PHM17xxx	2,340	2,385	2,410	3,060	3,110	3,130	3,335	3,335	3,335
PHM23xxx	2,985	3,035	3,055	3,335	3,335	3,335	3,335	3,335	3,335
PHM25xxx	3,200	3,250	3,275	3,335	3,335	3,335	3,335	3,335	3,335
PHM35xxx	3,335	3,335	3,335	3,335	3,335	3,335	3,335	3,335	3,335
PHM23xxx-2	3,265	3,265	3,265	3,265	3,265	3,265	3,265	3,265	3,265
PHM25xxx-2	3,265	3,265	3,265	3,265	3,265	3,265	3,265	3,265	3,265
PHM35xxx-2	3,390	3,390	3,390	3,390	3,390	3,390	3,390	3,390	3,390
PHM42xxx	3,265	3,265	3,265	3,265	3,265	3,265	3,265	3,265	3,265
PHM55xxx	3,265	3,265	3,265	3,265	3,265	3,265	3,265	3,265	3,265
Installations in Parallel Strand Lumber (PSL)									
PHM27xxx	3,335	3,335	3,335	3,335	3,335	3,335	3,335	3,335	3,335
PHM35xxx	3,335	3,335	3,335	3,335	3,335	3,335	3,335	3,335	3,335
PHM52xxx	3,265	3,265	3,265	3,265	3,265	3,265	3,265	3,265	3,265
PHM55xxx	3,265	3,265	3,265	3,265	3,265	3,265	3,265	3,265	3,265
PHM35xxx-2	3,390	3,390	3,390	3,390	3,390	3,390	3,390	3,390	3,390

For **SI:** 1 inch = 25.4 mm, 1 lbf = 4.45 N, 1 psi = 6.895 kPa.

[1]Allowable loads have been adjusted for load duration factors, C_D, as shown, in accordance with the NDS. The allowable loads do not apply to loads of other durations, and are not permitted to be adjusted for other load durations. See Sections 4.1 and 4.2 for additional design and installation requirements.
[2]See Section 3.25.3 for required fastener dimensions and mechanical properties.
[3]Allowable loads shown are for installations in wood members complying with Section 3.25.2. Wood members must also have a minimum reference compression perpendicular to grain design value, $F_{c\text{-}perp}$, of either 460 psi (3.17 MPa), 625 psi (4.31 MPa), or 750 psi (5.17 MPa), as specified in the table above.
[4]PHM Series hangers provide torsional resistance, which is defined as a moment of not less than 75 pounds (334 N) times the depth of the joist at which the lateral movement of the top or bottom of the joist with respect to the vertical position of the joist is 0.125 inch (3.2 mm). The height, H, of the joist hanger must be equal to the height of the joist to ensure proper attachment of the sheathing to the joist and supporting member.

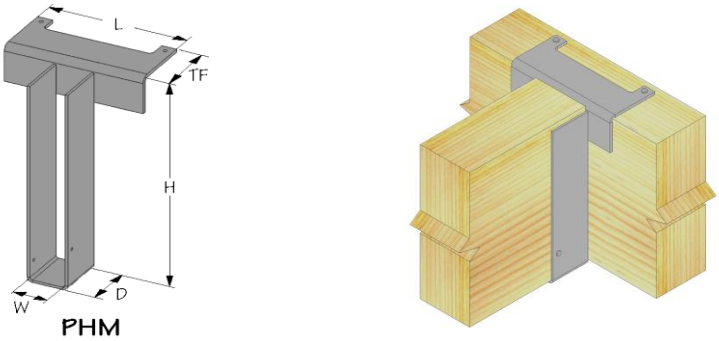

FIGURE 19—PHM TOP FLANGE HANGERS

TABLE 20—PHXU BEAM AND PURLIN HANGER ALLOWABLE LOADS[4]

STOCK NUMBER	STEEL GAGE	DIMENSIONS (inches)					FASTENER SCHEDULE				ALLOWABLE LOADS (lbs.)[1,3]			
							Header		Joist		Download			Uplift
		W	H	D	L	TF	Qty	Type[2]	Qty	Type[2]	C_D = 1.00	C_D = 1.15	C_D = 1.25	C_D = 1.60
PHXU17xxx	7	$1^{13}/_{16}$	$7^1/_4$ - 20	$3^1/_4$	10	$2^1/_2$	8	16d common	6	10d x $1^1/_2$"	4,350	4,350	4,350	930
PHXU23xxx	7	$2^3/_8$	$9^1/_4$ - 30	$3^1/_4$	10	$2^1/_2$	8	16d common	6	10d x $1^1/_2$"	5,370	5,370	5,370	870
PHXU25xxx	7	$2^9/_{16}$	$9^1/_4$ - 30	$3^1/_4$	10	$2^1/_2$	8	16d common	6	10d x $1^1/_2$"	5,370	5,370	5,370	870
PHXU26xxx	7	$2^{11}/_{16}$	$9^1/_4$ - 30	$3^1/_4$	10	$2^1/_2$	8	16d common	6	10d x $1^1/_2$"	5,370	5,370	5,370	870
PHXU27xxx	7	$2^3/_4$	$9^1/_4$ - 30	$3^1/_4$	10	$2^1/_2$	8	16d common	6	10d x $1^1/_2$"	5,370	5,370	5,370	870
PHXU31xxx	7	$3^1/_8$	$9^1/_4$ - 30	$3^1/_4$	10	$2^1/_2$	8	16d common	6	10d x $1^1/_2$"	5,370	5,370	5,370	870
PHXU35xxx	7	$3^9/_{16}$	$7^1/_4$ - 32	$3^1/_4$	10	$2^1/_2$	8	16d common	6	10d common	5,910	5,910	5,910	1,120
PHXU23xxx - 2	7	$4^3/_4$	$9^1/_4$ - 30	$3^1/_4$	$10^3/_4$	$2^1/_2$	8	16d common	6	10d common	5,910	5,910	5,910	1,120
PHXU25xxx - 2	7	$5^1/_8$	$9^1/_4$ - 30	$3^1/_4$	$11^1/_8$	$2^1/_2$	8	16d common	6	10d common	5,910	5,910	5,910	1,120
PHXU52xxx	7	$5^3/_8$	$9^1/_4$ - 30	$3^1/_4$	$11^3/_8$	$2^1/_2$	8	16d common	6	10d common	5,910	5,910	5,910	1,120
PHXU55xxx	7	$5^1/_2$	$9^1/_4$ - 30	$3^1/_4$	$11^1/_2$	$2^1/_2$	8	16d common	6	10d common	5,910	5,910	5,910	1,120
PHXU71xxx	7	$7^1/_8$	$9^1/_4$ - 32	$3^1/_4$	$13^1/_8$	$2^1/_2$	8	16d common	6	10d common	5,910	5,910	5,910	1,120

For **S1:** 1 inch = 25.4 mm, 1 lbf = 4.45 N.

[1]Allowable loads have been adjusted for load duration factors, C_D, as shown, in accordance with the NDS, and are not permitted to be adjusted for other load durations. See Section 4.1 for additional design requirements.
[2]See Section 3.25.3 for required nail dimensions and mechanical properties.
[3]Allowable loads shown are for installations in sawn lumber or structural composite lumber complying with Section 3.25.2. Wood members must also have a reference compression perpendicular to grain design value, $F_{c\text{-}perp}$, of 625 psi (4.31 MPa) or greater.
[4]The hangers provide torsional resistance, which is defined as a moment of not less than 75 pounds (334 N) times the depth of the joist at which the lateral movement of the top or bottom of the joist with respect to the vertical position of the joist is 0.125 inch (3.2 mm). The height, H, of the joist hanger must be equal to the height of the joist to ensure proper attachment of the sheathing to the joist and supporting member.

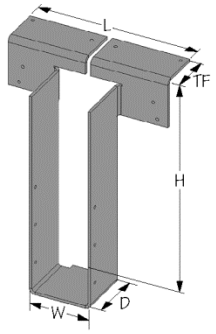

PHXU

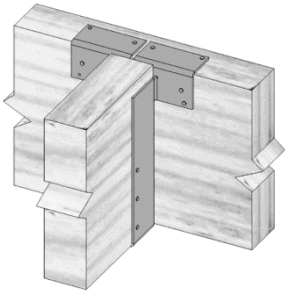

Typical PHXU Installation

FIGURE 20—DIMENSIONS AND INSTALLATION OF PHXU SERIES HANGERS

TABLE 21—SW, SWH AND KHW TOP MOUNT HANGER ALLOWABLE LOADS

STOCK NUMBER	STEEL GAGE		DIMENSIONS (inches)					FASTENER SCHEDULE				ALLOWABLE LOADS (lbs.)[1,3]			
								Header[5]		Joist		Download			Uplift
	Top Flange	U-Strap	L	W	H	D	TF	Qty	Type[2]	Qty	Type[2]	C_D = 1.00	C_D = 1.15	C_D = 1.25	C_D = 1.60
SW26	12	12	6 1/2	1 9/16	5 3/8	2 1/2	2 1/2	2	10d common	2	10d x 1/2"	2,315	2,315	2,315	135
SW28	12	12	6 1/2	1 9/16	7 1/8	2 1/2	2 1/2	2	10d common	2	10d x 1/2"	2,315	2,315	2,315	135
SW210	12	12	6 1/2	1 9/16	9 1/8	2 1/2	2 1/2	2	10d common	2	10d x 1/2"	2,315	2,315	2,315	135
SW212	12	12	6 1/2	1 9/16	11 1/8	2 1/2	2 1/2	2	10d common	2	10d x 1/2"	2,315	2,315	2,315	135
SW214	12	12	6 1/2	1 9/16	13 1/8	2 1/2	2 1/2	2	10d common	2	10d x 1/2"	2,315	2,315	2,315	135
SW216	12	12	6 1/2	1 9/16	15 1/8	2 1/2	2 1/2	2	10d common	2	10d x 1/2"	2,315	2,315	2,315	135
SW36	12	12	6 1/2	2 9/16	5 3/8	2 1/2	2 1/2	2	10d common	2	10d x 1/2"	2,520	2,520	2,250	135
SW38	12	12	6 1/2	2 9/16	7 1/8	2 1/2	2 1/2	2	10d common	2	10d x 1/2"	2,520	2,520	2,520	135
SW310	12	12	6 1/2	2 9/16	9 1/8	2 1/2	2 1/2	2	10d common	2	10d x 1/2"	2,520	2,520	2,520	135
SW46	12	12	6 1/2	3 9/16	5 3/8	2 1/2	2 1/2	2	10d common	2	10d common	2,520	2,520	2,520	135
SW48	12	12	6 1/2	3 9/16	7 1/8	2 1/2	2 1/2	2	10d common	2	10d common	2,520	2,520	2,520	135
SW410	12	12	6 1/2	3 9/16	9 1/8	2 1/2	2 1/2	2	10d common	2	10d common	2,520	2,520	2,520	135
SWH26-2	7	12	7	3 1/8	5 3/8	2 1/2	2 1/2	2	16d common	2	10d common	3,305	3,305	3,305	135
SWH28-2	7	12	7	3 1/8	7 1/8	2 1/2	2 1/2	2	16d common	2	10d common	3,305	3,305	3,305	135
SWH210-2	7	12	7	3 1/8	9 1/8	2 1/2	2 1/2	2	16d common	2	10d common	3,305	3,305	3,305	135
SWH212-2	7	12	7	3 1/8	11 1/8	2 1/2	2 1/2	2	16d common	2	10d common	3,305	3,305	3,305	135
SWH214-2	7	12	7	3 1/8	13 1/8	2 1/2	2 1/2	2	16d common	2	10d common	3,305	3,305	3,305	135
SWH216-2	7	12	7	3 1/8	15 1/8	2 1/2	2 1/2	2	16d common	2	10d common	3,305	3,305	3,305	135
SWH312	7	12	7	2 9/16	11 1/8	2 1/2	2 1/2	2	16d common	2	10d x 1/2"	3,305	3,305	3,305	135
SWH314	7	12	7	2 9/16	13 1/8	2 1/2	2 1/2	2	16d common	2	10d x 1/2"	3,305	3,305	3,305	135
SWH316	7	12	7	2 9/16	15 1/8	2 1/2	2 1/2	2	16d common	2	10d x 1/2"	3,305	3,305	3,305	135
SWH410	7	12	7	3 9/16	9 1/8	2 1/2	2 1/2	2	16d common	2	10d common	3,305	3,305	3,305	135
SWH412	7	12	7	3 9/16	11 1/8	2 1/2	2 1/2	2	16d common	2	10d common	3,305	3,305	3,305	135
SWH414	7	12	7	3 9/16	13 1/8	2 1/2	2 1/2	2	16d common	2	10d common	3,305	3,305	3,305	135
SWH416	7	12	7	3 9/16	15 1/8	2 1/2	2 1/2	2	16d common	2	10d common	3,305	3,305	3,305	135
SWH66	7	12	7	5 1/2	5 3/8	2 1/2	2 1/2	2	16d common	2	10d common	3,305	3,305	3,305	135
SWH68	7	12	7	5 1/2	7 1/8	2 1/2	2 1/2	2	16d common	2	10d common	3,305	3,305	3,305	135
SWH610	7	12	7	5 1/2	9 1/8	2 1/2	2 1/2	2	16d common	2	10d common	3,305	3,305	3,305	135
KHW46	3	10	10	3 9/16	5 3/8	2 1/2	2 1/2	4	20d x 2 1/2	2	10d common	5,535	5,535	5,535	135
KHW48	3	10	10	3 9/16	7 1/8	2 1/2	2 1/2	4	20d x 2 1/2	2	10d common	5,535	5,535	5,535	135
KHW410	3	10	10	3 9/16	9 1/8	2 1/2	2 1/2	4	20d x 2 1/2	2	10d common	5,535	5,535	5,535	135
KHW412	3	10	10	3 9/16	11 1/8	2 1/2	2 1/2	4	20d x 2 1/2	2	10d common	5,535	5,535	5,535	135
KHW414	3	10	10	3 9/16	13 1/8	2 1/2	2 1/2	4	20d x 2 1/2	2	10d common	5,535	5,535	5,535	135
KHW416	3	10	10	3 9/16	15 1/8	2 1/2	2 1/2	4	20d x 2 1/2	2	10d common	5,535	5,535	5,535	135
KHW66	3	10	10	5 1/2	5 3/8	2 1/2	2 1/2	4	20d x 2 1/2	2	10d common	5,535	5,535	5,535	135
KHW68	3	10	10	5 1/2	7 1/8	2 1/2	2 1/2	4	20d x 2 1/2	2	10d common	5,535	5,535	5,535	135
KHW610	3	10	10	5 1/2	9 1/8	2 1/2	2 1/2	4	20d x 2 1/2	2	10d common	5,535	5,535	5,535	135
KHW612	3	10	10	5 1/2	11 1/8	2 1/2	2 1/2	4	20d x 2 1/2	2	10d common	5,535	5,535	5,535	135
KHW614	3	10	10	5 1/2	13 1/8	2 1/2	2 1/2	4	20d x 2 1/2	2	10d common	5,535	5,535	5,535	135
KHW616	3	10	10	5 1/2	15 1/8	2 1/2	2 1/2	4	20d x 2 1/2	2	10d common	5,535	5,535	5,535	135
KHW86	3	10	10	7 1/2	5 3/8	2 1/2	2 1/2	4	20d x 2 1/2	2	10d common	5,535	5,535	5,535	135
KHW88	3	10	10	7 1/2	7 1/8	2 1/2	2 1/2	4	20d x 2 1/2	2	10d common	5,535	5,535	5,535	135
KHW810	3	10	10	7 1/2	9 1/8	2 1/2	2 1/2	4	20d x 2 1/2	2	10d common	5,535	5,535	5,535	135
KHW812	3	10	10	7 1/2	11 1/8	2 1/2	2 1/2	4	20d x 2 1/2	2	10d common	5,535	5,535	5,535	135
KHW814	3	10	10	7 1/2	13 1/8	2 1/2	2 1/2	4	20d x 2 1/2	2	10d common	5,535	5,535	5,535	135
KHW816	3	10	10	7 1/2	15 1/8	2 1/2	2 1/2	4	20d x 2 1/2	2	10d common	5,535	5,535	5,535	135
KHW26	3	10	10	2 11/16	Spec.	4	2 1/2	4	20d x 2 1/2	2	10d x 1/2"	5,295	5,295	5,295	135
KHW3	3	10	10	3 1/4	Spec.	3	2 1/2	4	20d x 2 1/2	2	10d common	5,535	5,535	5,535	135
KHW5	3	10	10	5 1/4	Spec.	2 1/2	2 1/2	4	20d x 2 1/2	2	10d common	5,535	5,535	5,535	135

For **S1:** 1 inch = 25.4 mm, 1 lbf = 4.45 N.

[1]Allowable loads have been adjusted for load duration factors, C_D, as shown, in accordance with the NDS, and are not permitted to be adjusted for other load durations. See Section 4.1 for additional design requirements.
[2]See Section 3.25.3 for required nail dimensions and mechanical properties.
[3]Allowable loads shown are for installations in sawn lumber or structural composite lumber complying with Section 3.25.2. Wood members must also have a reference compression perpendicular to grain design value, $F_{c\text{-}perp}$, of 625 psi (4.31 MPa) or greater.
[4]The hangers provide torsional resistance, which is defined as a moment of not less than 75 pounds (334 N) times the depth of the joist at which the lateral movement of the top or bottom of the joist with respect to the vertical position of the joist is 0.125 inch (3.2 mm). The height, H, of the joist hanger must be equal to the height of the joist to ensure proper attachment of the sheathing to the joist and supporting member.
[5]Headers must have a minimum thickness of 2 inches (51 mm).

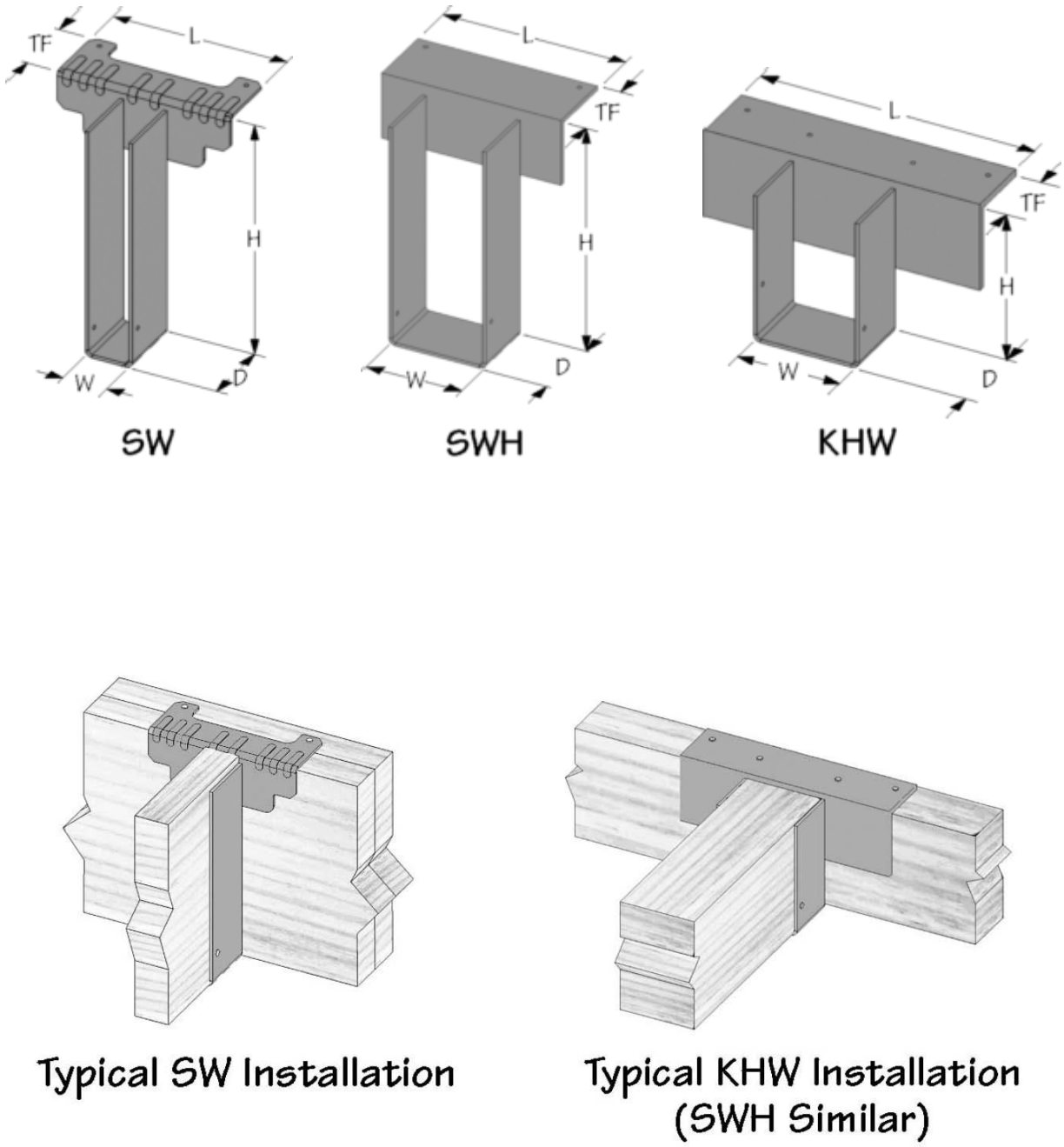

FIGURE 21—DIMENSIONS AND INSTALLATION OF SW, SWH AND KHW TOP MOUNT HANGERS

TABLE 22—TFI TOP MOUNT HANGER ALLOWABLE LOADS[1,2,3]

STOCK NO.	STEEL GAGE	DIMENSIONS (inches)				FASTENER SCHEDULE					ALLOWABLE LOADS (lbs)			
						Header			Joist		Download			Uplift
		W	H	D	TF	Top Qty	Min Face Qty	Type	Qty	Type	C_D = 1.0	C_D = 1.15	C_D = 1.25	C_D = 1.6
TFI3514	16	$2^3/_8$	14	$2^1/_2$	$2^1/_{16}$	4	2	16d Common	2	$10dx1^1/_2$	2,715	2,715	2,715	215
TFI3516	16	$2^3/_8$	16	$2^1/_2$	$2^1/_{16}$	4	2	16d Common	2	$10dx1^1/_2$	2,715	2,715	2,715	215
TFI3518	16	$2^3/_8$	18	$2^1/_2$	$2^1/_{16}$	4	2	16d Common	2	$10dx1^1/_2$	2,715	2,715	2,715	215
TFI3520	16	$2^3/_8$	20	$2^1/_2$	$2^1/_{16}$	4	2	16d Common	2	$10dx1^1/_2$	2,715	2,715	2,715	215
TFI314	16	$2^9/_{16}$	14	$2^1/_2$	2	4	2	16d Common	2	$10dx1^1/_2$	2,715	2,715	2,715	215
TFI316	16	$2^9/_{16}$	16	$2^1/_2$	2	4	2	16d Common	2	$10dx1^1/_2$	2,715	2,715	2,715	215
TFI318	16	$2^9/_{16}$	18	$2^1/_2$	2	4	2	16d Common	2	$10dx1^1/_2$	2,820	2,820	2,820	215
TFI320	16	$2^9/_{16}$	20	$2^1/_2$	2	4	2	16d Common	2	$10dx1^1/_2$	2,820	2,820	2,820	215
TFI322	16	$2^9/_{16}$	22	$2^1/_2$	2	4	6	16d Common	2	$10dx1^1/_2$	2,820	2,820	2,820	215
TFI324	16	$2^9/_{16}$	24	$2^1/_2$	2	4	6	16d Common	2	$10dx1^1/_2$	2,715	2,715	2,715	215
TFI326	16	$2^9/_{16}$	26	$2^1/_2$	2	4	6	16d Common	2	$10dx1^1/_2$	2,715	2,715	2,715	215
TFI414	16	$3^9/_{16}$	14	$2^1/_2$	$2^1/_8$	4	2	16d Common	2	$10dx1^1/_2$	2,715	2,715	2,715	215
TFI416	16	$3^9/_{16}$	16	$2^1/_2$	$2^1/_8$	4	2	16d Common	2	$10dx1^1/_2$	2,715	2,715	2,715	215
TFI418	16	$3^9/_{16}$	18	$2^1/_2$	$2^1/_8$	4	2	16d Common	2	$10dx1^1/_2$	2,820	2,820	2,820	215
TFI420	16	$3^9/_{16}$	20	$2^1/_2$	$2^1/_8$	4	2	16d Common	2	$10dx1^1/_2$	2,820	2,820	2,820	215
TFI422	16	$3^9/_{16}$	22	$2^1/_2$	$2^1/_8$	4	6	16d Common	2	$10dx1^1/_2$	2,820	2,820	2,820	215
TFI424	16	$3^9/_{16}$	24	$2^1/_2$	$2^1/_8$	4	6	16d Common	2	$10dx1^1/_2$	2,715	2,715	2,715	215
TFI426	16	$3^9/_{16}$	26	$2^1/_2$	$2^1/_8$	4	6	16d Common	2	$10dx1^1/_2$	2,715	2,715	2,715	215

For **SI:** 1 inch = 25.4 mm, 1 psi = 6.895 kPa.

[1]Allowable loads have been adjusted for load duration factors, C_D, as shown, in accordance with the NDS. The allowable loads do not apply to loads of other durations, and are not permitted to be adjusted for other load durations. See Sections 4.1 and 4.2 for design and installation requirements.
[2]See Section 3.25.2 for required fastener dimensions and mechanical properties.
[3]Allowable loads shown are for installations in wood members complying with Section 2.25.2. Wood members must also have a reference compression perpendicular to grain design value, $F_{c\text{-}perp}$, of 625 psi (4.31 MPa), or greater.

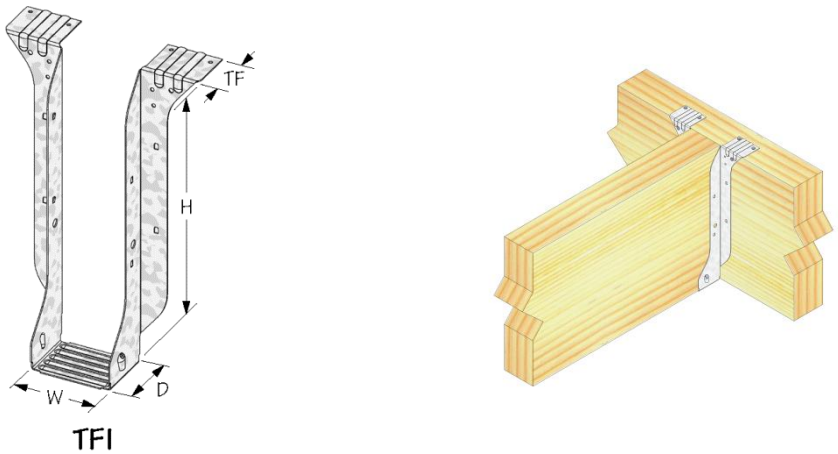

FIGURE 22—TFI TOP MOUNT HANGER AND TYPICAL INSTALLATION

TABLE 23—TFL WOOD I-JOIST HANGER ALLOWABLE LOADS[1,3]

STOCK NUMBER	STEEL GAGE	DIMENSIONS (in.)				NAIL SCHEDULE [2]					ALLOWABLE LOADS (lbs.)			
						Header			Joist		Download			Uplift
		W	H	D	TF	Top	Face	Type	Qty	Type	C_D=1.0	C_D=1.15	C_D=1.25	C_D=1.6
TFL17xxx	18	$1^3/_4$	$9^1/_4$ - 20	2	$1^1/_2$	4	2	10d Common	2	10d × $1^1/_2$	1,585	1,585	1,585	130
								16d Common	2	10d × $1^1/_2$	1,745	1,745	1,745	130
TFL20xxx	18	$2^1/_8$	$9^1/_4$ - 20	2	$1^1/_2$	4	2	10d Common	2	10d × $1^1/_2$	1,585	1,585	1,585	130
								16d Common	2	10d × $1^1/_2$	1,745	1,745	1,745	130
TFL23xxx	18	$2^5/_{16}$	$9^1/_4$ - 20	2	$1^1/_2$	4	2	10d Common	2	10d × $1^1/_2$	1,585	1,585	1,585	130
								16d Common	2	10d × $1^1/_2$	1,745	1,745	1,745	130
TFL25xxx	18	$2^9/_{16}$	$9^1/_4$ - 20	2	$1^1/_2$	4	2	10d Common	2	10d × $1^1/_2$	1,585	1,585	1,585	130
								16d Common	2	10d × $1^1/_2$	1,745	1,745	1,745	130

For **SI:** 1 inch = 25.4 mm, 1 lbf = 4.45 N, 1 psi = 6.895 kPa.

[1]Allowable loads have been adjusted for load duration factors, C_D, as shown, in accordance with the NDS. The allowable loads do not apply to loads of other durations, and are not permitted to be adjusted for other load durations. See Sections 4.1 and 4.2 for design and installation requirements.
[2]See Section 3.25.3 for required fastener dimensions and mechanical properties.
[3]Allowable loads shown are for installations in wood members complying with Section 3.25.2. Wood members must also have a reference compression perpendicular to grain design value, $F_{c\text{-}perp}$, of 625 psi (4.31 MPa) or greater.

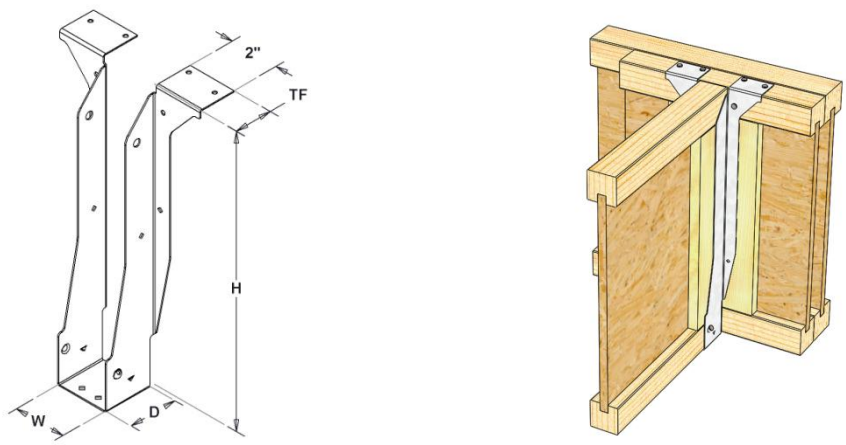

FIGURE 23—TFL WOOD I-JOIST HANGER

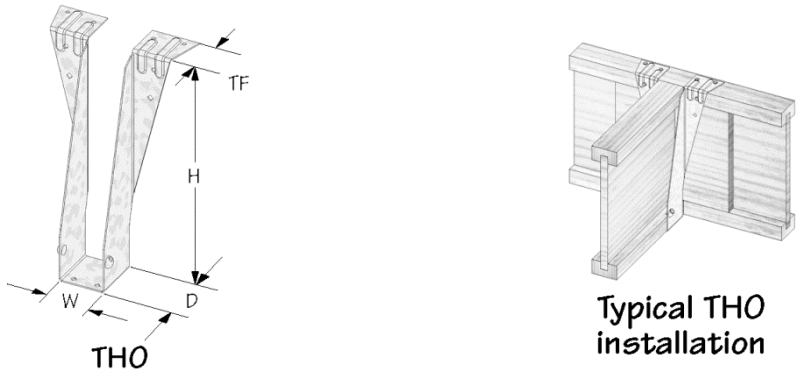

FIGURE 24—THO TOP MOUNT HANGER

(See allowable loads for THO top mount hanger on the following page)

TABLE 24—THO TOP MOUNT HANGER ALLOWABLE LOADS[1,2,3]

STOCK NO.	STEEL GAGE	DIMENSIONS (in.)				NAIL SCHEDULE					ALLOWABLE LOADS (lbs.)						
						Header			Joist		$F_{c\text{-}perp}$ = 460 psi			$F_{c\text{-}perp}$ = 625 psi			Uplift
		W	H	D	TF	Top	Face	Type	Qty	Type	C_D = 1.0	C_D = 1.15	C_D = 1.25	C_D = 1.0	C_D = 1.15	C_D = 1.25	C_D = 1.6
THO15925	18	1 9/16	9 1/4	2	1 1/2	4	2	10d Common	2	10d x 1 1/2	1,110	1,145	1,165	1,235	1,235	1,235	230
THO15950	18	1 1/2	9 1/2	2	1 1/2	4	2	10d Common	2	10d x 1 1/2	1,235	1,235	1,235	1,235	1,235	1,235	230
THO15118	18	1 1/2	11 7/8	2	1 9/16	4	2	10d Common	2	10d x 1 1/2	1,235	1,235	1,235	1,235	1,235	1,235	230
THO15140	16	1 9/16	14	2 3/8	1 1/2	4	6	10d Common	2	10d x 1 1/2	1,235	1,235	1,235	1,235	1,235	1,235	230
THO15950-2	16	3 1/16	9 1/2	2 3/8	1 1/2	4	6	16d Common	6	10d Common	2,120	2,240	2,320	2,525	2,525	2,525	1,135
THO16950	18	1 11/16	9 1/2	2	1 1/2	4	2	10d Common	2	10d x 1 1/2	1,110	1,145	1,165	1,235	1,235	1,235	230
THO16112	16	1 11/16	11 1/4	2	1 1/2	4	2	10d Common	2	10d x 1 1/2	1,110	1,140	1,160	1,235	1,235	1,235	230
THO16118	16	1 11/16	11 7/8	2	1 1/2	4	2	10d Common	2	10d x 1 1/2	1,110	1,140	1,160	1,235	1,235	1,235	230
THO16140	16	1 11/16	14	3	1 3/4	4	6	10d Common	2	10d x 1 1/2	2,370	2,370	2,370	2,370	2,370	2,370	230
THO17925	18	1 13/16	9 1/4	2	1 9/16	4	2	10d Common	2	10d x 1 1/2	1,145	1,180	1,200	1,235	1,235	1,235	230
THO17950	18	1 3/4	9 1/2	2	1 1/2	4	2	10d Common	2	10d x 1 1/2	1,235	1,235	1,235	1,235	1,235	1,235	230
THO17118	18	1 3/4	11 7/8	2	1 9/16	4	2	10d Common	2	10d x 1 1/2	1,235	1,235	1,235	1,235	1,235	1,235	230
THO17925-2	16	3 9/16	9 1/4	2 3/8	1 1/2	4	6	16d Common	6	10d Common	2,120	2,240	2,315	2,565	2,680	2,760	1,135
THO17950-2	16	3 9/16	9 1/2	2 3/8	1 9/16	4	6	16d Common	6	10d Common	2,170	2,290	2,370	2,630	2,750	2,830	1,135
THO17118-2	16	3 9/16	11 7/8	2 3/8	1 9/16	4	6	16d Common	6	10d Common	2,020	2,140	2,220	2,430	2,550	2,630	1,135
THO20950	18	2 1/8	9 1/2	2 3/8	1 15/16	4	2	10d Common	2	10d x 1 1/2	1,235	1,235	1,235	1,235	1,235	1,235	230
THO20118	18	2 1/8	11 7/8	2 3/8	1 15/16	4	2	10d Common	2	10d x 1 1/2	1,235	1,235	1,235	1,235	1,235	1,235	230
THO20140	18	2 1/8	14	2 3/8	1 15/16	4	6	10d Common	2	10d x 1 1/2	2,425	2,460	2,480	2,525	2,525	2,525	230
THO20160	18	2 1/8	16	2 3/8	1 15/16	4	6	10d Common	2	10d x 1 1/2	2,425	2,460	2,480	2,525	2,525	2,525	230
THO20950-2	16	4 3/16	9 1/2	3	2	4	6	16d Common	6	10d Common	2,845	2,920	2,920	2,920	2,920	2,920	1,135
THO20118-2	16	4 3/16	11 7/8	3	2	4	6	16d Common	6	10d Common	2,920	2,920	2,920	2,920	2,920	2,920	1,135
THO20140-2	12	4 3/16	14	3	1 15/16	4	6	16d Common	6	10d Common	3,190	3,300	3,380	3,640	3,640	3,640	1,145
THO20160-2	12	4 3/16	16	3	1 15/16	4	6	16d Common	6	10d Common	3,190	3,300	3,380	3,640	3,640	3,640	1,145
THO23140	18	2 3/8	14	2 3/8	2	4	8	10d Common	2	10d x 1 1/2	2,400	2,400	2,400	2,400	2,400	2,400	230
THO23180	18	2 3/8	18	2 3/8	2	4	10	10d Common	2	10d x 1 1/2	2,705	2,705	2,705	2,705	2,705	2,705	230
THO23200	18	2 3/8	20	2 3/8	2	4	10	10d Common	2	10d x 1 1/2	2,705	2,705	2,705	2,705	2,705	2,705	230
THO23950-2	12	4 3/4	9 1/2	3	2	4	6	16d Common	6	10d Common	3,090	3,200	3,280	3,640	3,640	3,640	1,145
THO23118-2	12	4 3/4	11 7/8	3	2 1/8	4	6	16d Common	6	10d Common	3,445	3,560	3,640	3,640	3,640	3,640	1,145
THO23140-2	12	4 3/4	14	3	2 1/8	4	8	16d Common	6	10d Common	3,790	3,940	4,045	4,420	4,420	4,420	1,145
THO23160-2	12	4 3/4	16	3	2 1/8	4	8	16d Common	6	10d Common	3,790	3,940	4,045	4,420	4,420	4,420	1,145
THO23180-2	12	4 3/4	18	3	2 1/8	4	10	16d Common	6	10d Common	4,135	4,325	4,455	5,000	5,190	5,320	1,145
THO23200-2	12	4 3/4	20	3	2 1/8	4	10	16d Common	6	10d Common	4,135	4,325	4,455	5,000	5,190	5,320	1,145
THO25950	18	2 9/16	9 1/2	2 3/8	1 15/16	4	6	10d Common	2	10d x 1 1/2	2,290	2,390	2,455	2,525	2,525	2,525	230
THO25118	16	2 9/16	11 7/8	2 3/8	1 15/16	4	6	10d Common	2	10d x 1 1/2	2,315	2,370	2,370	2,370	2,370	2,370	230
THO25140	18	2 9/16	14	2 3/8	2	4	8	10d Common	2	10d x 1 1/2	2,400	2,400	2,400	2,400	2,400	2,400	230
THO25925-2	12	5 1/8	9 1/4	3	2 11/16	4	6	16d Common	6	10d Common	3,640	3,640	3,640	3,640	3,640	3,640	1,145
THO25950-2	12	5 1/8	9 1/2	3	2 1/8	4	6	16d Common	6	10d Common	3,125	3,240	3,315	3,640	3,640	3,640	1,145
THO25112-2	12	5 1/8	11 1/4	3	2 1/8	4	6	16d Common	6	10d Common	3,445	3,560	3,640	3,640	3,640	3,640	1,145
THO25118-2	12	5 1/8	11 7/8	3	2 1/8	4	6	16d Common	6	10d Common	3,445	3,560	3,640	3,640	3,640	3,640	1,145
THO25140-2	12	5 1/8	14	3	2 1/8	4	8	16d Common	6	10d Common	3,790	3,940	4,045	4,420	4,420	4,420	1,145
THO25160-2	12	5 1/8	16	3	2 1/8	4	8	16d Common	6	10d Common	3,790	3,940	4,045	4,420	4,420	4,420	1,145
THO25180-2	12	5 1/8	18	3	2 1/8	4	10	16d Common	6	10d Common	4,135	4,325	4,455	5,000	5,190	5,320	1,145
THO25200-2	12	5 1/8	20	3	2 1/8	4	10	16d Common	6	10d Common	4,135	4,325	4,455	5,000	5,190	5,320	1,145
THO26925	18	2 11/16	9 1/4	2 3/8	2	4	6	10d Common	2	10d x 1 1/2	2,285	2,390	2,450	2,525	2,525	2,525	230
THO26950	18	2 11/16	9 1/2	2 3/8	2	4	6	10d Common	2	10d x 1 1/2	2,290	2,390	2,455	2,525	2,525	2,525	230
THO26118	16	2 11/16	11 7/8	2 3/8	2	4	6	10d Common	2	10d x 1 1/2	2,335	2,370	2,370	2,370	2,370	2,370	230
THO26140	18	2 11/16	14	2 3/8	2	4	8	10d Common	2	10d x 1 1/2	2,400	2,400	2,400	2,400	2,400	2,400	230
THO26160	18	2 11/16	16	2 3/8	2	4	8	10d Common	2	10d x 1 1/2	2,400	2,400	2,400	2,400	2,400	2,400	230
THO35925	16	3 9/16	9 1/4	2 3/8	2 1/2	4	6	10d Common	2	10d x 1 1/2	2,370	2,370	2,370	2,370	2,370	2,370	230
THO35938	16	3 9/16	9 3/8	2 3/8	2 9/16	4	6	10d Common	2	10d x 1 1/2	2,370	2,370	2,370	2,370	2,370	2,370	230
THO35950	16	3 9/16	9 1/2	2 3/8	2 7/16	4	6	10d Common	2	10d x 1 1/2	2,370	2,370	2,370	2,370	2,370	2,370	230
THO35112	16	3 9/16	11 1/4	2 3/8	2 1/2	4	6	10d Common	2	10d x 1 1/2	2,370	2,370	2,370	2,370	2,370	2,370	230
THO35118	18	3 9/16	11 7/8	2 3/8	2 1/2	4	6	10d Common	2	10d x 1 1/2	2,525	2,525	2,525	2,525	2,525	2,525	230
THO35120	18	3 9/16	12	2 3/8	2 1/2	4	6	10d Common	2	10d x 1 1/2	2,525	2,525	2,525	2,525	2,525	2,525	230
THO35130	18	3 9/16	13	2 3/8	2 1/2	4	6	10d Common	2	10d x 1 1/2	2,525	2,525	2,525	2,525	2,525	2,525	230
THO35140	18	3 9/16	14	2 3/8	2 1/2	4	8	10d Common	2	10d x 1 1/2	2,400	2,400	2,400	2,400	2,400	2,400	230
THO35160	18	3 9/16	16	2 3/8	2 1/2	4	8	10d Common	2	10d x 1 1/2	2,400	2,400	2,400	2,400	2,400	2,400	230
THO35180	18	3 9/16	18	2 3/8	2 1/2	4	10	10d Common	2	10d x 1 1/2	2,705	2,705	2,705	2,705	2,705	2,705	230

For **SI:** 1 inch = 25.4mm, 1 lbf = 4.45 N, 1 psi = 6.895 kPa.,

[1]Allowable loads have been adjusted for load duration factors, C_D, as shown, in accordance with the NDS. The allowable loads do not apply to loads of other durations and are not permitted to be adjusted for other load durations. See Sections 4.1 and 4.2 for additional design and installation requirements.

[2]See Section 3.25.3 for required fastener dimensions and mechanical properties.

[3]Allowable loads shown are for installations in wood members complying with Section 3.25.2. Wood members must also have a minimum reference compression perpendicular to grain design value, $F_{c\text{-}perp}$, of either 460 psi (3.17 MPa), or 625 psi (4.31 MPa), as specified in the table above.

TABLE 25—STEEL TYPES AND CORROSION RESISTANCE

PRODUCT	STEEL	CORROSION PROTECTION
BPH Beam and Purlin Hanger	ASTM A653, SS designation, Grade 40	G90[2]
BPHA Beam and Purlin Hnager	ASTM A653, SS designation, Grade 40	G90[2]
HBPH Bean and Purlin Hanger	ASTM A653, SS designation, Grade 40	G90[2]
HDO Top Mount Hanger	ASTM A653, SS designation, Grade 40	G90[2]
HL Light Gauge Purlin Hanger	ASTM A653, SS designation, Grade 40	G90[2]
HLBH Beam Hangers	ASTM A1011, SS designation, Grade 40	Painted
JDS Purlin Hangers	ASTM A653, SS designation, Grade 40	G90[2]
JH Joist Hanger	ASTM A653, SS designation, Grade 40	G90[2]
JPF Purlin Hanger	ASTM A653, SS designation, Grade 40	G90[2]
KEG Glulam Beam Hanger[1]	7 Gage material: ASTM A1011, SS designation, Grade 40; 3 Gage material: ASTM A36	Painted
KEGQ Top Mount Girder Hanger	7 Gage material: ASTM A1011, SS designation, Grade 40 3 Gage material: ASTM A36	Painted
KF Panel Hanger	ASTM A653, SS designation, Grade 40	G90[2]
KGLS Glulam Saddle Hanger[1] / KGLST Glulam Saddle Hanger[1]	7 Gage material: ASTM A1011, SS designation, Grade 40; 3 Gage material: ASTM A36	Painted
KGLT Glulam Beam Hanger[1]	7 Gage material: ASTM A1011, SS designation, Grade 40; 3 Gage material: ASTM A36	Painted
KHC Hinge Connector[1] / KHCST Seismic Strap[1]	7 Gage material: ASTM A1011, SS designation, Grade 40; 3 Gage material: ASTM A36	Painted
KHGLS Glulam Saddle Hanger[1] / KHGLST Glulam Saddle Hanger[1]	7 Gage material: ASTM A1011, SS designation, Grade 40; 3 Gage material: ASTM A36	Painted
KHGLT Glulam Beam Hanger[1]	7 Gage material: ASTM A1011, SS designation, Grade 40; 3 Gage material: ASTM A36	Painted
KLB Glulam Beam Hanger	14 Gage material: ASTM A653 SS designation, Grade 40	G90[2]
KB Glulam Beam Hanger	12 Gage material: ASTM A653, SS designation, Grade 40	G90[2]
KHHB, KGB, and KHG Glulam Beam Hanger	ASTM A1011, SS designation, Grade 40	Painted
KLEG Glulam Beam Hanger[1]	ASTM A1011, SS designation, Grade 40	Painted
KMEG Glulam Beam Hanger[1]	ASTM A1011, SS designation, Grade 40	Painted
MSH Strap Hanger	ASTM A653, SS designation, Grade 40	G90[2]
PHG Panel Hanger	ASTM A653, SS designation, Grade 40	G90[2]
PHM Top Flange Hanger[1]	ASTM A1011, SS designation, Grade 40	Painted
PHXU Beam and Purlin Hanger	ASTM A653, SS designation, Grade 40	G90[2]
SW[1], SWH[1], and KHW[1] Top Mount Hanger	ASTM A1011, SS designation, Grade 40	Painted
SCA Stair Angle	ASTM A653, SS designation, Grade 40	G185[2]
TFI Top Mount Hanger	ASTM A653, SS designation, Grade 40	G90[2]
TFL Wood I-joist Hanger	ASTM A653, SS designation, Grade 40	G90[2]
THO Top Mount Hanger	ASTM A653, SS designation, Grade 40	G90[2]

[1]Products with factory welds are manufactured at the MiTek manufacturing facilities in Largo, Florida; Tolleson, Arizona; and Montgomery, Minnesota, under a quality-control program with inspections by ICC-ES.
[2]Corrosion protection is a zinc coating in accordance with ASTM A653.

DIVISION: 06 00 00—WOOD, PLASTICS AND COMPOSITES
Section: 06 05 23—Wood, Plastic, and Composite Fastenings

REPORT HOLDER:

MITEK® INC.

EVALUATION SUBJECT:

MITEK® TOP MOUNT HANGERS FOR WOOD FRAMED CONSTRUCTION

1.0 REPORT PURPOSE AND SCOPE

Purpose:

The purpose of this evaluation report supplement is to indicate that MiTek Top Mount Hangers for Wood Framed Construction, described in ICC-ES evaluation report ESR-3444, have also been evaluated for compliance with the codes noted below as adopted by the Los Angeles Department of Building and Safety (LADBS).

Applicable code editions:

- 2026 *City of Los Angeles Building Code* (LABC)
- 2026 *City of Los Angeles Residential Code* (LARC)

2.0 CONCLUSIONS

The MiTek Top Mount Hangers for Wood Framed Construction, described in Sections 2.0 through 7.0 of the evaluation report ESR-3444, comply with the LABC Chapter 23, and the LARC, and are subjected to the conditions of use described in this supplement.

3.0 CONDITIONS OF USE

MiTek Top Mount Hangers for Wood Framed Construction, described in this evaluation report supplement must comply with all of the following conditions:

- All applicable sections in the evaluation report ESR-3444.
- The design, installation, conditions of use and identification are in accordance with the 2024 *International Building Code®* (IBC) or 2024 *International Residential Code®* (IRC) provisions, as applicable, noted in the evaluation report ESR-3444.
- The design, installation and inspection are in accordance with additional requirements of LABC Chapters 16 and 17, as applicable.
- The supported end of joist or beam must be within $^{1}/_{4}$-inch from the supporting member.
- Solid blocking must be required for all joist hangers supporting roof joists having one end twisted more than one-half degree per foot of length relative to the other end, except as specifically noted in the evaluation report.
- Under the LARC, an engineered design in accordance with LARC Section R301.1.3 must be submitted.

This evaluation report supplement expires concurrently with the evaluation report ESR-3444, reissued October 2024 and revised July 2026.

ICC-ES Evaluation Reports are not to be construed as representing aesthetics or any other attributes not specifically addressed, nor are they to be construed as an endorsement of the subject of the report or a recommendation for its use. There is no warranty by ICC Evaluation Service, LLC, express or implied, as to any finding or other matter in this report, or as to any product covered by the report.

Copyright © 2026 ICC Evaluation Service, LLC. All rights reserved.

DIVISION: 06 00 00—WOOD, PLASTICS AND COMPOSITES
Section: 06 05 23—Wood, Plastic, and Composite Fastenings

REPORT HOLDER:

MITEK® INC.

EVALUATION SUBJECT:

MITEK® TOP MOUNT HANGERS FOR WOOD FRAMED CONSTRUCTION

1.0 REPORT PURPOSE AND SCOPE

Purpose:

The purpose of this evaluation report supplement is to indicate that MiTek Top Mount Hangers for Wood Framed Construction, described in ICC-ES evaluation report ESR-3444, have also been evaluated for compliance with the code*(s)* noted below.

Applicable code edition*(s)*:

- *2025 and 2022 California Building Code* (CBC)

For evaluation of applicable Chapters adopted by the California Office of Statewide Health Planning and Development (OSHPD) AKA: California Department of Health Care Access and Information (HCAI) and the Division of State Architect (DSA), see Sections 2.1.1 and 2.1.2 below.

- *2025 and 2022 California Residential Code* (CRC)

2.0 CONCLUSIONS

2.1 CBC:

The MiTek Top Mount Hangers for Wood Framed Construction, described in Sections 2.0 through 7.0 of the evaluation report ESR-3444, comply with CBC Chapter 23, provided the design and installation are in accordance with the 2024 and 2021 *International Building Code®* (IBC) provisions, as applicable, noted in the evaluation report and the additional requirements of CBC Chapters 16, 17 and 23, as applicable.

2.1.1 OSHPD:

The applicable OSHPD Sections and Chapters of the CBC are beyond the scope of this supplement.

2.1.2 DSA:

The applicable DSA Sections and Chapters of the CBC are beyond the scope of this supplement.

2.2 CRC:

The MiTek Top Mount Hangers for Wood Framed Construction, described in Sections 2.0 through 7.0 of the evaluation report ESR-3444, comply with CRC Chapter 3, provided the design and installation are in accordance with the 2024 and 2021 *International Residential Code®* (IRC) provisions, as applicable, noted in the evaluation report and the additional requirements of CRC Chapter 3, as applicable.

This supplement expires concurrently with the evaluation report, reissued October 2024 and revised July 2026.

ICC-ES Evaluation Reports are not to be construed as representing aesthetics or any other attributes not specifically addressed, nor are they to be construed as an endorsement of the subject of the report or a recommendation for its use. There is no warranty by ICC Evaluation Service, LLC, express or implied, as to any finding or other matter in this report, or as to any product covered by the report.

Copyright © 2026 ICC Evaluation Service, LLC. All rights reserved.

DIVISION: 06 00 00—WOOD, PLASTICS AND COMPOSITES
Section: 06 05 23—Wood, Plastic, and Composite Fastenings

REPORT HOLDER:

MITEK® INC.

EVALUATION SUBJECT:

MITEK® TOP MOUNT HANGERS FOR WOOD FRAMED CONSTRUCTION

1.0 REPORT PURPOSE AND SCOPE

Purpose:

The purpose of this evaluation report supplement is to indicate that the MiTek Top Mount Hangers for Wood Framed Construction, described in ICC-ES evaluation report ESR-3444, have also been evaluated for compliance with the codes noted below.

Applicable code editions:

- 2026 and 2023 *Florida Building Code—Building*
- 2026 and 2023 *Florida Building Code—Residential*

2.0 CONCLUSIONS

The MiTek Top Mount Hangers for Wood Framed Construction, described in Sections 2.0 through 7.0 of the evaluation report ESR-3444, comply with the *Florida Building Code—Building*, and the *Florida Building Code—Residential*. The design requirements must be determined in accordance with the *Florida Building Code—Building* or the *Florida Building Code—Residential*, as applicable. The installation requirements noted in ICC-ES evaluation report ESR-3444 for the 2024 and 2021 *International Building Code®* meet the requirements of the *Florida Building Code—Building* or the *Florida Building Code—Residential*, as applicable, with the following conditions:

- For use within 3,000 feet of a saltwater coastline, fasteners and connectors must comply with Section 1711 and Table 1711.1 of the 2026 *Florida Building Code—Building* or Section R332 and Table R332.1 of the 2026 *Florida Building Code—Residential*, as applicable.
- The MiTek Top Mount Hangers for Wood Framed Construction described in the evaluation report are structural connectors used for connecting wood framing members in accordance with Section 2304.10.3 of the *Florida Building Code—Building*. The connectors may also be used in structures regulated under the *Florida Building Code—Residential* when an engineered design is submitted to, and approved by, the code official, in accordance with Section R301.1.3 of the *Florida Building Code—Residential*.
- Connectors and fasteners used in contact with preservative-treated or fire-retardant-treated wood must comply with Section 2304.10.5 of the *Florida Building Code—Building* or Section R317.3 of the *Florida Building Code—Residential*, as applicable.

Use of the MiTek Top Mount Hangers for Wood Framed Construction has also been found to be in compliance with the High-Velocity Hurricane Zone provisions of the *Florida Building Code—Building*, and the *Florida Building Code—Residential* with the following condition:

a. For connections subject to uplift, the connection must be designed for no less than 700 pounds (3114 N).

For products falling under Florida Rule 61G20-3, verification that the report holder's quality assurance program is audited by a quality assurance entity approved by the Florida Building Commission for the type of inspections being conducted is the responsibility of an approved validation entity (or the code official when the report holder does not possess an approval by the Commission). Florida Rule 61G20-3 is applicable to products and/or systems which comprise the building envelope and structural frame for compliance with the structural requirements of the Florida Building Code.

This evaluation report supplement expires concurrently with the evaluation report, reissued October 2024 and revised July 2026.

ICC-ES Evaluation Reports are not to be construed as representing aesthetics or any other attributes not specifically addressed, nor are they to be construed as an endorsement of the subject of the report or a recommendation for its use. There is no warranty by ICC Evaluation Service, LLC, express or implied, as to any finding or other matter in this report, or as to any product covered by the report.

Copyright © 2026 ICC Evaluation Service, LLC. All rights reserved.